ARMY TM 9-6115-639-13
AIR FORCE TO 35C2-3-386-51
MARINE CORPS TM 10155A-13/1

OPERATOR'S, UNIT, AND DIRECT SUPPORT MAINTENANCE MANUAL

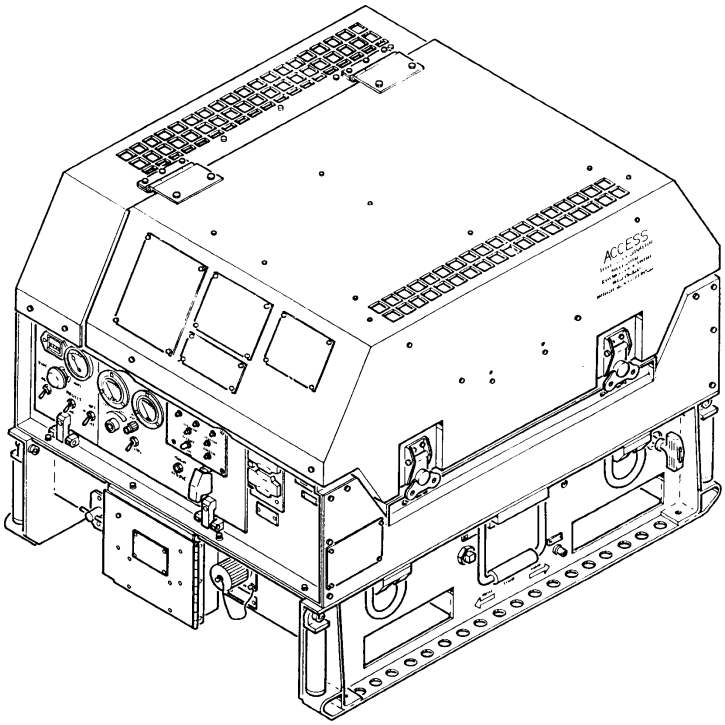

OPERATING INSTRUCTIONS	2-1
OPERATOR TROUBLESHOOTING	3-3
UNIT LEVEL PMCS	4-7
UNIT LEVEL TROUBLESHOOTING	4-12
UNIT MAINTENANCE PROCEDURES	4-27
DIRECT SUPPORT TROUBLESHOOTING	5-3
DIRECT SUPPORT MAINTENANCE	5-4
MAINTENANCE ALLOCATION CHART	B-1

3KW TACTICAL QUIET GENERATOR SET
MEP 831A (60 HZ) (NSN: 6115-01-285-3012) (EIC: VG6)
MEP 832A (400 HZ) (NSN: 6115-01-287-2431) (EIC: VN7)

DISTRIBUTION STATEMENT A: Approved for public release; distribution is unlimited.

HEADQUARTERS, DEPARTMENTS OF THE ARMY, AIR FORCE AND MARINE CORPS

1 November 2000

PCN 182 101550 00

LIST OF EFFECTIVE PAGES

INSERT LATEST CHANGED PAGES, DESTROY SUPERSEDED PAGES

NOTE: The portion of the text affected by the changes is indicated by a vertical line in the outer margins of the page. Changes to illustrations are indicated by miniature pointing hands. Changes to wiring diagrams are indicated by shaded areas.

Dates of issue for original and changed pages are:

Original.....0 .....1 Nov 00

Page No.	* Change No.	Page No.	* Change No.	Page No.	* Change No.
Cover	0				
A/(B blank)	0				
a-e	0				
i-viii	0				
1-1 thru 1-26	0				
2-1 thru 2-32	0				
3-1 thru 3-12	0				
4-1 thru 4-141	0				
5-1 thru 5-16	0				
A-1 thru A-2	0				
B-1 thru B-8	0				
C-1 thru C-2	0				
D-1 thru D-2	0				
E-1 thru E-4	0				
F-1 thru F-2	0				
G-1 thru G-4	0				
H-1 thru H-2	0				
I-1 thru I-4	0				
Index-1 thru Index-6	0				
FP-1/(FP-2 blank) thru	0				
FP-31/(FP-32 blank)					

* Zero in this column indicates an original page.

WARNING SUMMARY

The following safety precautions are for personnel to understand and apply during many phases of operation and maintenance. Disregard of these warnings and precautionary information can result in serious injury or death.

Warning statements have been strategically placed throughout this manual prior to the operating or maintenance procedures considered essential to the protection of personnel. Prior to starting any task, the warning included in the text for that task must be reviewed and understood.

This manual describes physical and chemical processes which may require the use of chemicals, solvents, paints, or other commercially available material. The user of this manual should obtain the material safety data sheets (Occupational Safety and Heath Act (OSHA) Form 20 or equivalent) from the manufacturer or suppliers of materials to be used. The user must be completely familiar with the manufacturer/supplier information and adhere to the procedures, recommendations, warnings, and cautions of the manufacturer/supplier for the safe use, handling, storage, and disposal of these materials.

WARNING

KEEP AWAY FROM LIVE CIRCUITS

Do not replace components or make adjustments with the voltage supply turned on. Dangerous potentials may exist under certain conditions when the power control is in the off position. Avoid casualties by always removing power and discharging and grounding a circuit before touching it. Failure to observe this warning can result in severe personal injury.

WARNING

HIGH VOLTAGE

High voltage is produced when the unit is in operation. Use care when working around an open control panel with the generator set operating. Improper operation and/or failure to follow this warning could result in personal injury or death by electrocution.

WARNING

Never attempt to start the generator set if it is not properly grounded. Equipment must be grounded in accordance with the procedures in Paragraph 2-6. Failure to observe this warning can result in personal injury or death by electrocution.

WARNING

Generator battle short mode is for emergency operation only. Prolonged use under this mode could damage the generator set or pose potential shock hazard to personnel.

WARNING

DC voltages are present at generator set electrical components even with the generator set shut down. Avoid shorting any positive terminal with ground or negative. If no DC voltage is required, always disconnect DC power source to the generator set before working on it. Failure to observe this warning can result in personal injury.

WARNING

Never attempt to connect or disconnect load cables while the unit is running. Failure to observe this warning could result in severe personal injury or death by electrocution.

WARNING

Never service or perform maintenance on the generator set while the engine is running. Always shut down the unit before servicing. Allow engine to cool before handling components. Failure to observe this warning can result in severe burn or injury.

WARNING

Never reach into the enclosure to service or adjust the equipment alone. Make sure to work with someone who can render aid in case of an emergency.

WARNING

Shut down the generator set at first sign of failure. Continued operation can result in injury to personnel and will cause damage to equipment. If the generator set is shut down by the activation of a safety device, do not operate again until the cause of the shut down has been determined and eliminated. Failure to observe this warning can result in equipment damage and/or potential personal injury.

WARNING

If damaged or defective components are discovered, repair must be performed before operation can begin. Perform required repairs and adjustments before proceeding. Do not operate the generator set with damaged components. Personal injury can occur if damaged parts are left unfixed. Failure to observe this warning can result in personal injury and/or equipment damage.

WARNING

DANGEROUS CARBON MONOXIDE GASES

Exhaust discharge contains deadly gases including carbon monoxide. Do not operate generator set in enclosed area unless exhaust discharge is properly vented outside. Position as far away from personnel, shelters, and occupied vehicles as possible. Failure to observe this warning could result in severe personal injury or death due to carbon monoxide poisoning.

FOR ARTIFICIAL RESPIRATION, REFER TO FM 21-11.

THE BEST DEFENSE AGAINST CARBON MONOXIDE POISONING IS GOOD VENTILATION.

WARNING

Fuel used in this generator set is flammable and toxic to skin, eyes, and respiratory tract. Avoid repeated or prolonged contact. Handle only in well ventilated area. Keep away from sparks, open flames, or other sources of ignition. Do not splash fuel on hot components. Do not fuel generator set while it is operating. Do not over fill the tank. Ensure the unit is properly grounded before fueling. Failure to observe this warning can result in personal injury and equipment damage due to potential fuel ignition and possible explosion. Ensure approved gloves and face shield are worn during handling.

WARNING

LIQUIDS UNDER PRESSURE

Liquids under pressure are generated as a result of operation of this generator set. High pressure leaks could cause severe personal injury or death.

WARNING

Cleaning solvents are flammable and toxic to eyes, skin, and respiratory tract. Skin and eye protections are required when working in contact with cleaning solvents. Avoid prolonged or repeated contact. Work in well ventilated area only. Keep away from heat, sparks, and open flame. Do not smoke while using cleaning solvent. Failure to observe this warning can result in injury or death to personnel.

WARNING

The adhesives used in maintenance of the generator set (see Appendix E) are flammable and toxic. Vapors may ignite explosively. Avoid breathing in vapors. Provide adequate ventilation to prevent vapor concentrations in excess of permissible exposure levels. Keep away from heat, sparks, and open flame. Do not smoke. Extinguish all flames and turn off non-explosion-proof electrical equipment during use until vapors are dissipated. Close containers tightly.

WARNING

Use caution when lifting or moving the generator set to prevent injury to personnel and damage to equipment. Six persons are required for manual lifting. Use lifting rings for lifting device and forklift pockets for forklift only. Do not lift object over personnel. Failure to observe this warning can result in personal injury and/or equipment damage.

WARNING

Avoid contacting metal items with bare skin in extreme cold weather. Failure to observe this warning can result in personal injury.

WARNING

REMOVE ALL JEWELRY BEFORE WORKING ON THE EQUIPMENT

Metal jewelry can conduct electricity. Remove metal jewelry before working on electrical system or components. Failure to observe this warning can result in severe personal injury from electric shock.

WARNING

Jewelry and other loose and dangling articles and clothing can be caught in moving parts. Remove jewelry and loose and dangling articles and clothing before working on the engine. Failure to observe this warning can result in injury to personnel.

WARNING

CARC paint dust is a heath hazard. Wear protective eyewear, mask, and gloves when sanding CARC painted surfaces. Failure to observe this warning can result in personal injury.

WARNING

If battery is not installed, battery cable ends must be isolated from each other and positive end must be isolated from ground. Failure to isolate battery cable ends can result in severe electrical discharge.

WARNING

With any access door open, the noise level of the generator set when operating could cause hearing damage. Hearing protection must be worn when working near the generator set while running.

TECHNICAL MANUAL
ARMY TM 9-6115-639-13
AIR FORCE TO 35C2-3-386-51
MARINE CORPS TM 10155A-13/1

HEADQUARTERS
DEPARTMENTS OF THE ARMY,
AIR FORCE AND MARINE CORPS
WASHINGTON D.C. 1 November 2000

OPERATOR'S, UNIT, AND DIRECT SUPPORT MAINTENANCE MANUAL

FOR

3KW TACTICAL QUIET GENERATOR SET
MEP 831A (60 HZ) (NSN: 6115-01-285-3012) (EIC: VG6)
MEP 832A (400 HZ) (NSN: 6115-01-287-2431) (EIC: VN7)

REPORTING ERRORS AND RECOMMENDING IMPROVEMENTS

You can help improve this manual. If you find any mistakes, or if you know of a way to improve the procedures, please let us know. Mail your letter, DA Form 2028 (Recommended Changes to Publications and Blank Form) or DA Form 2028-2 located in the back of this manual directly to: Commander, US Army Communications and Electronics Command (CECOM), ATTN: AMSEL-LC-LEO-D-CS-CFO, Fort Monmouth, NJ 07703-5000. The FAX number is 732-532-1413, DSN 992-1413. You can also E-mail your recommendations to AMSEL-LC-LEO-PUBS-CHG @cecom3.monmouth.army.mil.

For Air Force, submit AFTO Form 22 (Technical Order System Publication Improvement Report and Reply) in accordance with paragraph 6-5, Section VI, TO 00-5-1. Forward direct to prime ALC/MST.

For Marine Corps units, submit NAVMC 10772 (Recommended Changes to Technical Publications) to: Commanding General, Marine Corps Logistics Base, Life Cycle Management Center, ATTN Code 826, 814 Radford Blvd., Suite 20320, Albany, Georgia 31704-0320. You can submit and electronic form over the web by going to: als.usmc.mil and selecting NAVMC Tracking Program.

A reply will be furnished directly to you.

TABLE OF CONTENTS

WARNING SUMMARY ..... a
HOW TO USE THIS MANUAL vi

CHAPTER 1 INTRODUCTION 1-1

Section I General Information 1-1
Section II Equipment Description 1-5
Section III Principles of Operation 1-21

TABLE OF CONTENTS

CHAPTER 2 OPERATING INSTRUCTIONS 2-1

Section I Description and Use of Operator's Controls and Indicators 2-2
Section II Operator Preventive Maintenance Checks and Services (PMCS) 2-8
Section III Operation Under Usual Conditions 2-19
Section IV Operation Under Unusual Conditions 2-28

CHAPTER 3 OPERATOR MAINTENANCE INSTRUCTIONS 3-1
Section I Lubrication Instructions 3-2
Section II Operator Troubleshooting Procedures 3-3
Section III Operator Maintenance Procedures 3-9

CHAPTER 4 UNIT MAINTENANCE INSTRUCTIONS 4-1

Section I Lubrication Instructions 4-3
Section II Repair Parts; Tools; Special Tools; Test, Measurement and Diagnostic Equipment (TMDE); and Support Equipment 4-6
Section III Service Upon Receipt of Equipment 4-6
Section IV Unit Preventive Maintenance Checks and Services (PMCS) 4-7
Section V Unit Level Troubleshooting Procedures 4-12
Section VI Unit Maintenance Procedures 4-27
Section VII Preparation for Shipment and Storage 4-140

CHAPTER 5 DIRECT SUPPORT MAINTENANCE INSTRUCTIONS 5-1

Section I Repair Parts; Tools; Special Tools; Test, Measurement and Diagnostic Equipment (TMDE); and Support Equipment 5-2
Section II Service Upon Receipt of Equipment 5-2
Section III Direct Support Level Troubleshooting Procedures 5-3
Section IV Direct Support Maintenance Procedures 5-4

Appendix A REFERENCES A-1
Appendix B MAINTENANCE ALLOCATION CHART (MAC) B-1
Appendix C COMPONENTS OF END ITEM (COEI) AND BASIC ISSUE ITEMS (BII) LISTS C-1
Appendix D ADDITIONAL AUTHORIZATION LIST (AAL) ITEMS D-1
Appendix E EXPENDABLE AND DURABLE ITEMS LIST E-1
Appendix F ILLUSTRATED LIST OF MANUFACTURED ITEMS F-1
Appendix G TORQUE LIMITS G-1
Appendix H MANDATORY REPLACEMENT PARTS H-1
Appendix I WARRANTY INFORMATION I-1
ALPHABETICAL INDEX Index-1

LIST OF ILLUSTRATIONS

Figure No.	Title	Page
1-1	3kW Tactical Quiet Generator Set	1-3
1-2	Location of Generator Set Components	1-7
1-3	Engine / Generator Assembly	1-9
1-4	Generator Set Fuel System	1-11
1-5	Generator Set Data, Instruction, and Warning Plates	1-14
1-6	Fuel System Schematic	1-25
2-1	Generator Set Controls and Indicators	2-5
2-2	Ground Rod and Cable Installation	2-21
2-3	Operating Procedures	2-27
2-4	Manual Engine Starting	2-31
3-1	Air Filter Replacement	3-11
4-1	Engine Oil Servicing	4-5
4-2	Diagnostic Test Points	4-13
4-3	Control Box Assembly	4-29
4-4	Control Panel Assembly	4-33
4-5	HOURS Meter	4-34
4-6	FUEL LEVEL Gauge	4-35
4-7	VOLTAGE Meter	4-36
4-8	LOAD Meter	4-37
4-9	Fault Indicator Module	4-38
4-10	Operator Switches	4-39
4-11	EMERGENCY STOP Switch	4-41
4-12	DC CIRCUIT BREAKER	4-43
4-13	CIRCUIT INTERRUPTER Indicator Light	4-44
4-14	VOLTAGE ADJUST Rheostat	4-46
4-15	Control Box Relays	4-48
4-16	Terminal Blocks, Fuse, Diodes	4-51
4-17	Governor Control	4-52
4-18	Control Box Wiring Harness	4-55
4-19	AC Circuit Interrupter Contactor	4-56
4-20	Battery Charging Regulator	4-58
4-21	Convenience Receptacle	4-60
4-22	Ground Fault Circuit Interrupter	4-62
4-23	SLAVE RECEPTACLE	4-64
4-24	Output Terminals / Filter	4-66
4-25	Voltage Resistors	4-70
4-26	Lifting Handles	4-72
4-27	Engine Oil Drain Assembly	4-75
4-28	Engine Temperature Switch	4-76
4-29	Lubrication Oil Pressure Switch	4-78

LIST OF ILLUSTRATIONS - cont.

Figure No.	Title	Page
4-30	Fuel Level Switch	4-80
4-31	Fuel Sender	4-82
4-32	Fuel Tank Pickup Tube	4-84
4-33	Primary Fuel Pump	4-85
4-34	Muffler Assembly	4-89
4-35	Battery	4-93
4-36	Battery Cables	4-97
4-37	Main Access Cover	4-101
4-38	Enclosure Panels	4-109
4-39	High Temperature Switch and Cooling Fan Removal	4-113
4-40	Low Temperature Switch and Cooling Fan Removal	4-115
4-41	Low Temperature Switch and Cooling Fan Installation	4-117
4-42	High Temperature Switch and Cooling Fan Installation	4-119
4-43	Filter Servicing	4-120
4-44	Fuel Filter / Water Separator	4-121
4-45	Fuel Fill Cap and Pocket	4-123
4-46	Auxiliary Fuel Pump	4-126
4-47	Power Inverter / Converter	4-129
4-48	DC Magnetic Contactors	4-133
4-49	Governor Actuator Adjustment	4-134
4-50	Governor Control Module	4-135
4-51	Governor Actuator	4-137
5-1	Engine / Alternator Assembly	5-5
5-2	Permanent Magnet Alternator	5-11
5-3	Fuel Tank	5-15
FO-1	Generator Set Electrical Schematic	FP-1
FO-2	Generator Set Wiring Diagram	FP-5
FO-3	Engine Wiring Harness Diagram, 60 Hz	FP-13
FO-4	Engine Wiring Harness Diagram, 400 Hz	FP-17
FO-5	Control Box Wiring Harness Diagram, 60 Hz	FP-21
FO-6	Control Box Wiring Harness Diagram, 400 Hz	FP-27

LIST OF TABLES

Table No.	Title	Page
1-1	Nomenclature Cross-Reference	1-4
1-2	Equipment Data	1-12
2-1	Operator Preventive Maintenance Checks and Services	2-12
3-1	Lubricant Table for Generator Set MEP 831A/832A	3-2
3-2	Malfunction Index (Operator Troubleshooting)	3-3
3-3	Operator Level Troubleshooting	3-4
4-1	Lubricant Table for Generator Set	4-3
4-2	Unit Level Preventive Maintenance Checks and Services	4-10
4-3	Malfunction Index (Unit Troubleshooting)	4-12
4-4	Unit Level Troubleshooting Procedures	4-14

How to Use This Manual

1. DESCRIPTION OF THE MANUAL.

a. **Chapter Organization.** This manual has five chapters covering: introductory information, principles of operation, operator maintenance instruction, unit maintenance instructions, and direct support maintenance instructions. Each chapter is divided into sections. These sections contain the cleaning, inspection, troubleshooting, and repair tasks appropriate for the specific maintenance level. Each chapter contains a table of contents containing the tasks within that chapter. See the overall Table of Contents (page i) for the chapters and sections of this manual.

b. **Paragraph and Task Numbering.** All paragraphs and maintenance tasks are numbered. This helps you find what you need when you need it. Use the Table of Contents (page i) or alphabetical index (at the back of the manual) to find the paragraph or task you need.

c. **Appendices.** The appendices in this manual contain both general maintenance information and specific data for this generator set. They list reference manuals and materials, components of the generator set, additional authorization list items, expendable supplies and materials, torque limits, and mandatory replacement parts. Refer to the Table of Contents (page i) for a complete list of the appendices used in this manual.

2. HOW TO FIX A GENERATOR SET MALFUNCTION.

a. **Determining the Cause.** Figuring out the cause of the malfunction, or troubleshooting, is the first step in fixing the generator set and returning it to operation. Follow these steps to determine the root of your problem:

(1) Turn to the Table of Contents section in this manual (page i).

(2) Locate “Troubleshooting” for your maintenance level and turn to the page indicated.

(3) In the Troubleshooting section, find the troubleshooting symptom for the component affected by the malfunction. Refer to the Symptom Index for help.

NOTE

If the specific symptom is not addressed, the maintenance required is most likely more detailed than authorized for your level. Notify personnel at a higher maintenance level.

(4) Begin troubleshooting. Carefully work your way down through the troubleshooting table to try and determine what the problem is.

(5) Once the trouble has been determined, go to the maintenance task called out. Remedy the malfunction, test the generator set, and return it to service.

b. **Preparing for a Task.**

NOTE

You must familiarize yourself with the entire maintenance procedure before starting any maintenance task. Ensure all parts, materials, and tools are handy. Read through all steps before beginning.

(1) PAY ATTENTION TO WARNINGS, CAUTIONS, AND NOTES.

(2) Maintenance tasks are arranged in a logical disassembly/assembly sequence and address only the component or assembly to be replaced. Locator illustrations are included for removal and installation. These illustrations show you the area of the generator set to be worked on.

(3) All mandatory replacement parts are listed, including gaskets, packings, cotter pins, and lockwashers. They are listed by the Repair Parts and Special Tools List (RPSTL) name. Expendable supplies and support materials are listed, including solvents, rags, grease, and safety wire.

(4) Tools, tool kits or shop sets needed to do the task are listed. If tools from a repairman's kit are needed, the kit is listed. Tools that are not in a kit or set are listed by name, type, and size. Special tools and test equipment are listed by part number.

(5) Related TM's needed to accomplish the task are listed. The steps tell when these TM's are needed.

(6) Read the entire task carefully before starting. DO NOT START A TASK UNTIL:

You know what replacement parts, tools, and supplies are needed

You have the things you need

You understand what to do

c. **How To Do The Task.** Before starting, read the entire task. Familiarize yourself with the entire procedure before you begin the task. The following are considered standard maintenance practices. Instructions about these practices will not normally be included in the task steps. Task steps will tell you when standard maintenance practices do not apply. As you read, remember the following:

(1) Electrical wiring must be tagged before it is disconnected.

(2) Used packings, retainers, gaskets, cotter pins, lockwashers, and safety wire shall be discards. Do not reuse. New parts shall be installed.

(3) Packings shall be coated with lubricant before installation in accordance with task instructions.

(4) Disassembly procedures list all steps required to support total authorized repair of a component. You may not need to disassemble a part as far as described in the task. Follow the steps to disassemble as far as required to replace worn or damaged parts.

(5) Before components or the disassembled parts of a component are inspected, they must be cleaned as required.

(6) Components and mating surface areas must be inspected for serviceable condition before installation.

(7) When a nut is tightened or loosened on a bolt, the bolt head must be held with a wrench.

(8) A special torque will be cited when the words TORQUE TO are used in the task. Standard torques are used at all other times. Refer to Torque Limits, Appendix G, for information.

(9) When tightening hardware, observe compliance with the drag torque as required. To determine drag torque, thread nut onto bolt until at least two threads protrude. The nut must not contact the mating part. The torque required to begin turning the nut is the drag torque.

(10) After maintenance, inspect for foreign objects.

NOTE

Remember, this manual is divided by maintenance level (operator, unit, and direct support). If you cannot find a generator set malfunction in the troubleshooting section for your maintenance level, or cannot find the appropriate corrective actions in the maintenance section, notify personnel at a higher maintenance level.

3. REPAIR PARTS AND SPECIAL TOOLS LIST.

Refer to TM 9-6115-639-23P for the Generator Set Repair Parts and Special Tools List (RPSTL). The RPSTL contains exploded view illustrations and parts lists keyed to the illustrations. It lists part number, part name, and quantity used in each application. Use the RPSTL to identify and order replacement parts.

CHAPTER 1
INTRODUCTION

Section I GENERAL INFORMATION 1-2

1-1 Scope 1-2
1-2 Consolidated Index of Army Publications and Blank Forms 1-2
1-3 Maintenance Forms and Records 1-2
1-4 Corrosion Prevention and Control (CPC) 1-2
1-5 Destruction of Army Material to Prevent Enemy Use 1-4
1-6 Reporting Equipment Improvement Recommendations (EIR's) 1-4
1-7 Warranty Information 1-4
1-8 Nomenclature Cross-Reference List 1-4
1-9 Administrative Storage 1-4

Section II EQUIPMENT DESCRIPTION 1-5

1-10 Equipment Characteristics, Capabilities, and Features 1-5
1-11 Location and Description of Major Components 1-6
1-12 Differences Between Models 1-10
1-13 Equipment Data 1-10
1-14 Identification and Instruction Plates 1-10

Section III PRINCIPLES OF OPERATION 1-21

1-15 Principles of Operation 1-21
1-16 Electrical System 1-21
1-17 Direct Current System 1-21
1-18 Alternating Current System 1-23
1-19 Generator 1-23
1-20 Fuel System 1-24

Section I. GENERAL INFORMATION

1-1. SCOPE.

a. This manual provides instructions on operation, troubleshooting and maintenance of the 3kW Tactical Quiet Generator Set, MEP 831A (60 Hz), NSN 6115-01-285-3012, and MEP 832A (400 Hz), NSN 6115-01-287-2431. Information is provided on principles of operation, controls and indicators, preventive maintenance checks and services, lubrication, operation, troubleshooting, and maintenance. Refer to Figure 1-1 for full view illustration of the Generator Set showing features pertinent to set operation and maintenance.

b. Refer to TM 9-2815-257-24 for detailed information regarding the operation and maintenance of the Diesel Engine Assembly, Model Number L70AE-DEGFR, NSN 2815-01-465-5993, manufactured by Yanmar Diesel Engine Company, Ltd.

1-2. CONSOLIDATED INDEX OF ARMY PUBLICATIONS AND FORMS.

Refer to the latest issue of DA Pam 25-30 to determine whether there are new additions, changes, or additional publications pertaining to the equipment.

1-3. MAINTENANCE FORMS, RECORDS, AND REPORTS.

a. **Reports of Maintenance and Unsatisfactory Equipment.** Department of the Army forms and procedures used for equipment maintenance will be those prescribed by DA Pam 738-750, The Army Maintenance Management System (TAMMS). Air Force personnel will use AFR 66-1 for maintenance reporting and TO 00-35D54 for unsatisfactory equipment reporting. Marine Corps personnel refer to the on-line MCPDS Index of Technical Publications. Refer to TM 4700-15/1 for disposition of forms and records required for Marine Corps equipment.

b. **Reporting of Item and Packaging Discrepancies.** Fill out and forward SF 364 (Report of Discrepancy (ROD)) as prescribed in AR 735-11-2, AFR 400-54, or MCO 4430.3J.

c. **Transportation Discrepancy Report (TDR) (SF 361).** Fill out and forward Transportation Discrepancy Report (TDR) (SF 361) as prescribed in AR 55-38, AFR 75-18, or MCO P4610.19D.

1-4. CORROSION PREVENTION AND CONTROL (CPC).

a. Corrosion Prevention and Control (CPC) of Army materiel is a continuing concern. It is important that any corrosion problems with the engine assembly be reported so that the problem can be corrected and improvements can be made to prevent the problem in future engine assemblies.

b. While corrosion is typically associated with rusting of metals, it can also include deterioration of other materials, such as rubber or plastic. Unusual cracking, softening, swelling, or breaking of these materials may be a corrosion problem.

c. If a corrosion problem is identified, it can be reported using Standard Form 368, Product Quality Deficiency Report. Use of keywords such as “corrosion”, “rust”, “deterioration”, or “cracking” will ensure that the information is identified as a CPC problem.

d. Submit Form 368 to address specified in DA Pam 738-750. Air Force personnel will use TO 25-1-3.

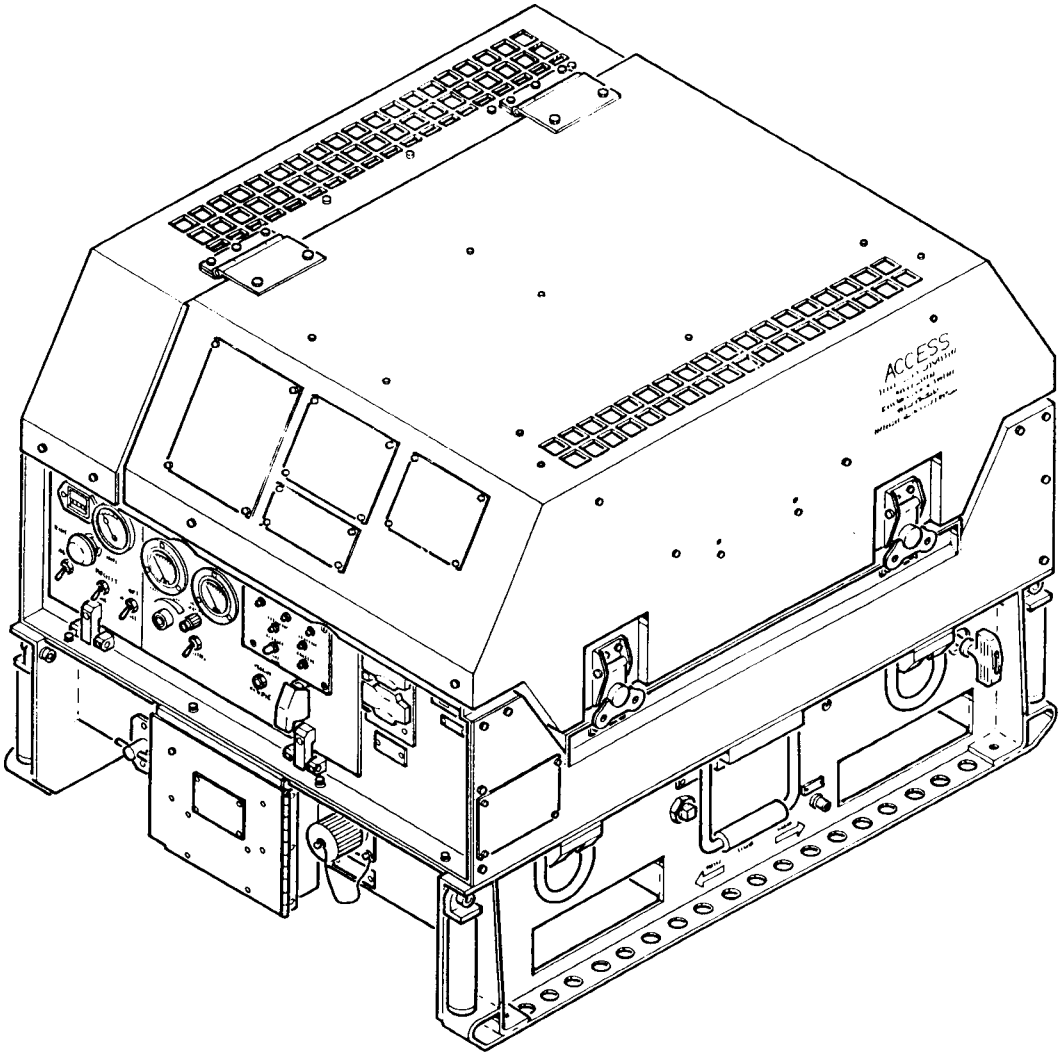

Figure 1-1. 3kW Tactical Quiet Generator Set

1-5. DESTRUCTION OF ARMY MATERIAL TO PREVENT ENEMY USE.

For destruction of Army material to prevent enemy use, refer to TM 750-244-3.

1-6. REPORTING EQUIPMENT IMPROVEMENT RECOMMENDATIONS (EIR's).

a. **Army.** If your engine assembly needs improvement, let us know. Send us an EIR. You are the only one who can tell us what you do not like about your equipment. Put it on a SF 368 (Product Quality Deficiency Report). Mail it to: Commander, US Army Communications and Electronics Command (CECOM), ATTN: AMSEL-LC-LEO-D-CS-CFO, Fort Monmouth, NJ 07703-5000. We will send you a reply.

b. **Air Force.** Air Force personnel are encouraged to submit EIR's in accordance with AFR 900-4.

c. **Marine Corps.** QDR shall be reported on SF 368 in accordance with MCO P4855.10, Product Quality Deficiency Report Manual. Submit to: Commander, Marine Corps Logistics Base, Life Cycle Management Center, ATTN Product Support Section 822, 814 Radford Blvd., Suite 20320, Albany, Georgia 31704-0320, or email to mbmatcompqdrs @ matcom.usmc.mil.

1-7. WARRANTY INFORMATION.

The 3kW generator set components are warranted in accordance with the component manufacturer's latent defect commercial warranty. The warranty starts on the date found in block 23, DA Form 2408-9 in the log book. Report all defects in material and workmanship to your supervisor who will take appropriate action. Refer to Appendix I for information on manufacturer's component warranties and conditions.

1-8. NOMENCLATURE CROSS-REFERENCE LIST.

Shortened nomenclature is used in this manual to make procedures easier for you to read. A cross-reference between the shortened nomenclature and the official nomenclature is shown in Table 1-1.

Table 1-1. Nomenclature Cross-Reference

Common Name	Official Nomenclature
Generator Set	3kW Tactical Quiet Generator Set, MEP 831A / 832A

1-9. ADMINISTRATIVE STORAGE

Administrative storage of equipment issued to and used by Army activities will have Preventive Maintenance Checks and Services (PMCS) performed before storing. When removing the equipment from administrative storage, the PMCS checks should be performed to assure operational readiness.

Section II. EQUIPMENT DESCRIPTION

1-10. EQUIPMENT CHARACTERISTICS, CAPABILITIES, AND FEATURES.

a. Characteristics.

- 3kW, 60Hz (MEP 831A) / 400Hz (MEP 832A), Tactical Quiet Generator (TQG)
- Skid mounted with forklift provisions
- Six lifting handles, four tie-down rings
- Hinged enclosure allows quick access for preventive and scheduled maintenance
- Thermostatically controlled, two fan enclosure cooling system
- 24VDC cranking system
- Single cylinder, air cooled, direct injection, four-stroke cycle diesel engine
- Permanent magnet AC generator with power inverter / converter
- Four-gallon fuel tank (allowing 8 hours of continuous operation at full load)

b. Capabilities and Features.

- 3000 to 3450 RPM operating speed
- 3.0 kilowatt, 1 phase, 2 wire, 120VAC or 1 phase, 3 wire, 120/240VAC
- Rated engine horsepower of 6.7 HP at 3600 RPM
- Equipped with a 24VDC NATO slave receptacle
- Equipped with a two-plug 120VAC convenience receptacle with Ground Fault Circuit Interrupter (GFCI) for the 120VAC convenience receptacle (MEP 831A, 60 Hz only)
- Audio noise rating less than 72dBA at 23 feet from enclosure, less than 85dBA at operator's position
- Weight: Dry = 304.0 pounds (maximum), Wet (fuel tank full) = 334.0 pounds (maximum)
- Dimensions: 34.8 x 27.8 x 26.5 inches

1-11. LOCATION AND DESCRIPTION OF MAJOR COMPONENTS (Figure 1-2).

The 3kW Tactical Quiet Generator Set, MEP 831A (60 Hz), NSN 6115-01-285-3012, and MEP 832A (400 Hz), NSN 6115-01-287-2431, hereafter referred to as generator set, is a portable unit capable of being mounted on a trailer for transportation. The generator set is designed to provide a quiet source of AC power under temperature ranges from -25 to +120° F (-32 to +49° C), at any level of relative humidity and at altitudes of up to 8000 feet (2440 meters) above sea level.

The generator set consists of an enclosure assembly (1, Figure 1-2), one-cylinder diesel engine (2), permanent magnet AC generator (3), control box assembly (18), output / load panel (16), welded skid base assembly (17), primary and auxiliary fuel systems, enclosure cooling and ventilation system, engine exhaust assembly, a 24VDC battery, and associated wiring harnesses, electrical connectors, fuel and oil hoses.

a. **Enclosure Assembly**. The enclosure assembly (1, Figure 1-2) supports the control box assembly, cooling air system, and exhaust assembly components. It protects the engine, generator, and other internal components from damage. It incorporates a fire retardant acoustical insulation to reduce noise levels, and acts as a shield to reduce electromagnetic pulse effects on generator set components.

A hinged cover (4) allows easy access for inspection and maintenance of the generator set system. Two latches (6) lock the cover in place when it is closed. Air ducts in the cover and enclosure housing allow for ventilation of hot exhaust air.

b. **Enclosure Cooling and Ventilation System**. Air intake openings and engine intake ducts at the rear of the enclosure assembly allow for engine cooling using external air. Two thermostatically controlled fans (5, Figure 1-2) mounted in the enclosure assembly activate during high temperature conditions to drive hot exhaust air through openings in the enclosure.

c. **Skid Base**. The welded skid base (17, Figure 1-2) provides the main structural support for the generator set. The engine / generator assembly is mounted to the skid base with vibration isolators which isolate engine generated vibrations from the rest of the generator set. The generator set's plastic fuel tank is contained within the skid base, as is the 24VDC battery.

The skid base contains four swing-out lifting handles (7), two standard lifting handles (9), four tie-down rings (8), and two forklift openings (12). An oil drain plug (10) and fuel drain plug (11) protrude through openings on the skid base, on the right side of the generator set. A 24VDC slave receptacle (14) and load terminal connections (behind cover (16)) are mounted to the skid base at the rear of the generator set.

d. **Battery**. A 24VDC battery, mounted in the skid base, provides cranking power for the engine as well as DC power for the control system. The battery's location in the skid base permits easy servicing. Openings in the enclosure assembly vent escaping battery gases to the atmosphere, preventing gas build-up inside the enclosure.

e. **Exhaust System**. The generator set exhaust system (20) consists of a muffler and exhaust piping. Engine exhaust exits the generator set through an opening in the top of the enclosure assembly. Insulating material on exhaust system components protects maintenance personnel against potential burn hazards and reduces heat rejection into the enclosure assembly.

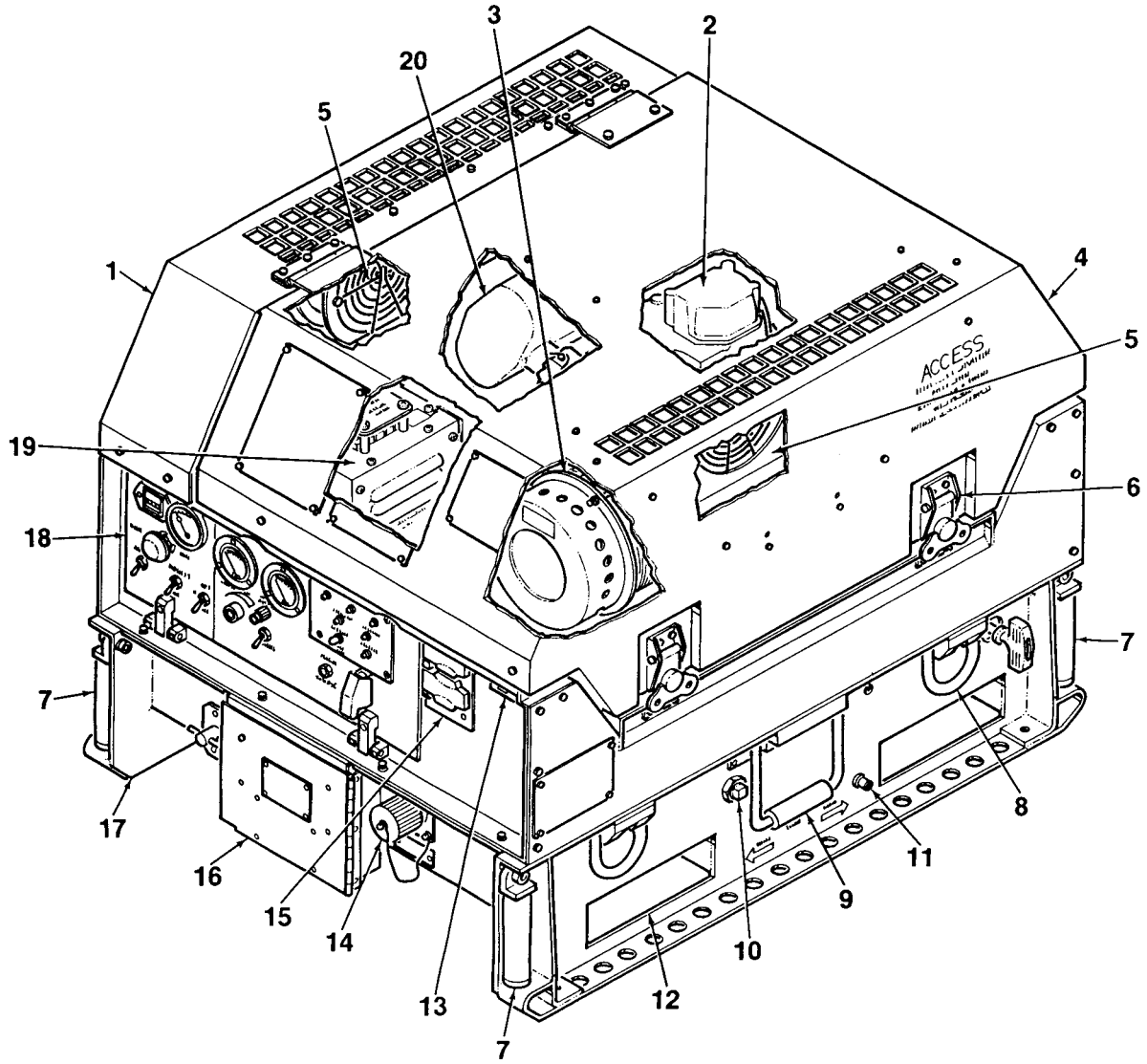

1. Enclosure Assembly
2. Diesel Engine
3. Generator
4. Enclosure Cover
5. Cooling Fan
6. Cover Latch
7. Lifting Handle
8. Tie-Down Ring
9. Lifting Handle
10. Oil Drain Plug
11. Fuel Drain Plug
12. Forklift Opening
13. Ground Fault Circuit Interrupter (60 Hz only)
14. Slave Receptacle
15. Convenience Receptacle (60 Hz only)
16. Output/Load Terminal Cover
17. Skid Base
18. Control Box Assembly
19. Power Inverter/Converter
20. Exhaust System

Figure 1-2. Location of Generator Set Components

f. **Control Box Assembly**. The control box assembly is mounted to the enclosure assembly at the rear of the generator set. Instruments, controls, and indicators required to operate the generator set are located on the control box assembly. The control box assembly consists of a control panel (18, Figure 1-2), ground fault circuit interrupter (13) (60 Hz only), and convenience receptacle (15) (60 Hz only). Internal components include the governor control module, control logic relays and diodes, voltage surge arrestors, diagnostic test points, and associated wiring harnesses and electrical connectors.

The control panel (18) portion of the box is hinged to allow access for testing and maintenance. The control panel contains the following instruments and switches: HOURS meter, FUEL LEVEL gauge, VOLTAGE meter, LOAD meter, START / RUN / STOP switch, EMERGENCY STOP switch, AUX FUEL switch, PREHEAT switch, VOLTAGE ADJUST potentiometer, CIRCUIT INTERRUPTER switch, DC CIRCUIT BREAKER switch, BATTLE SHORT switch, and a fault indicator module. The fault indicator module contains lights that indicate the following generator set conditions: ENGINE HIGH TEMP, LOW OIL PRESSURE, NO FUEL, OVERVOLTAGE, OVERLOAD SHORT CIRCUIT, and BATTLE SHORT ON. Refer to paragraph 2-1, Operator's Controls and Indicators, for a complete explanation of each instrument and switch.

g. **Output Terminals and Slave Receptacle**. The output terminal board and ground terminal are located on the generator set skid base, just below the control box assembly. A hinged cover (16, Figure 1-2) allows access to the three load terminals and single ground terminal. An insulated wrench, used for connecting wires to the terminals, is secured to the rear of the hinged cover. A filter mounted to the back of the load terminals prevents electro-magnetic interference (EMI). The generator set's 24VDC slave receptacle is mounted to the skid base, to the right of the output terminals.

h. **Engine / Generator Assembly**. The engine / generator assembly (Figure 1-3) consists of a single-cylinder diesel engine (14), permanent magnet generator (5), and associated electrical, fuel, and oil components. The engine / generator assembly is mounted to the skid base (8) with vibration mounts (7) to prevent engine vibration from affecting the operation of other generator set components. A fuel drain plug (9) and oil drain plug (10) allow maintenance personnel to drain engine fluids.

i. **Engine**. The generator set is equipped with a single cylinder, air cooled, direct injection, four-stroke cycle, diesel engine (14, Figure 1-3). The engine is designed to operate between 3000 and 3600 RPM, with an output of 6.7 horsepower at 3600 RPM. An electric governor sets the no load speed at 3000 to 3050 RPM.

The engine has self-contained oil lubrication and fuel systems. A mechanical governor (13) is set for 3800 RPM, maximum, and is controlled by an electrical governor for variable speed operation. The engine is equipped with an air filter (2), muffler (3), 24VDC starter motor (4), manifold heater (15), engine high temperature switch (6), engine oil low pressure switch (12), and oil fill cap and gauge (11). A rope pull recoil system (1) permits manual start of the engine without the battery.

Engine cooling is provided by a flywheel fan, which forces air over the cylinder fins and engine components. The fan is completely guarded to prevent inadvertent contact during operation.

j. **Generator**. The permanent magnet generator (5, Figure 1-3) consists of four three-phase isolated AC output windings. Voltage output is proportional to engine speed (approximately 190VAC at 3kW, 3450 RPM). The rotating portion of the generator is mounted directly to the engine, on the engine crankshaft extension, without a bearing. The generator stator is direct mounted to the engine, and uses Class H insulation.

LEFT SIDE VIEW

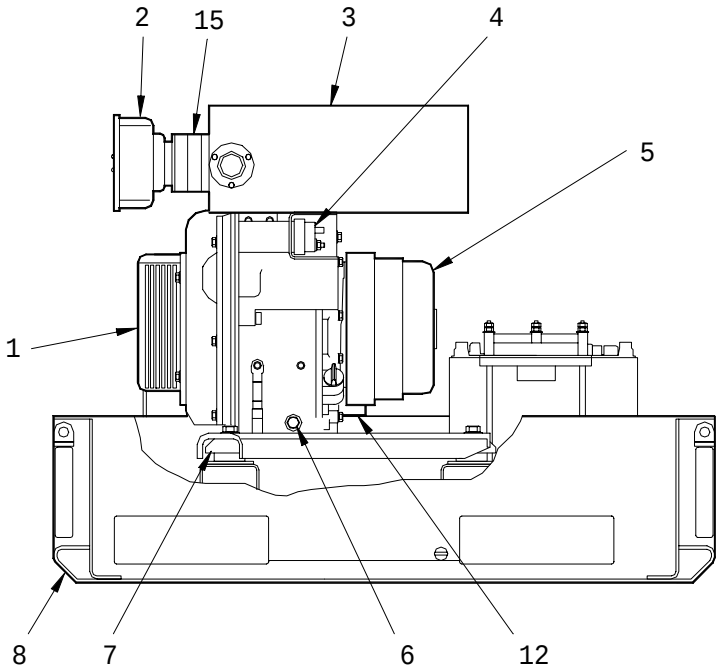

VIEW FROM REAR

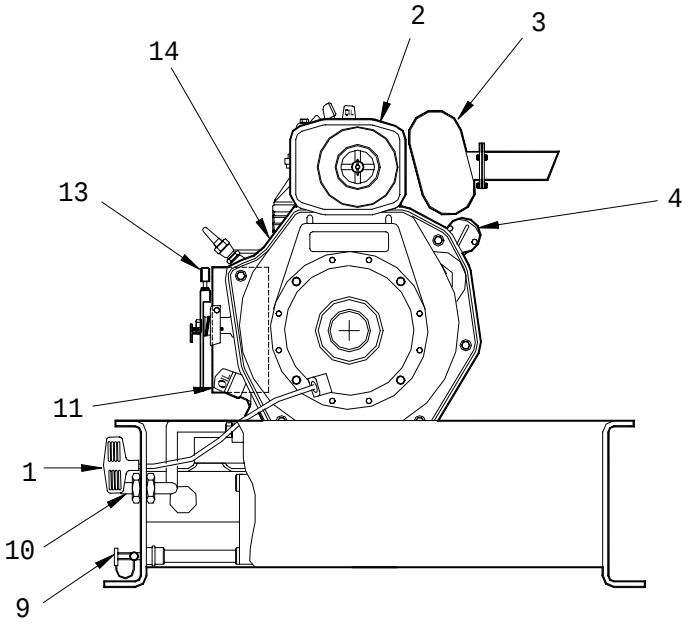

1. Recoil System
2. Air Filter
3. Muffler
4. Starter Motor
5. Generator
6. Temperature Switch
7. Vibration Mount
8. Skid Base
9. Fuel Drain Plug
10. Oil Drain Plug
11. Oil Fill Cap / Gauge
12. Oil Pressure Switch
13. Governor Actuator
14. Diesel Engine
15. Manifold Heater

Figure 1-3. Engine / Generator Assembly.

k. **Power Inverter / Converter**. The generator power inverter / converter (19, Figure 1-2) is located in the skid base, between the control box and generator. The power converter consists of rectifiers, a power inverter, and associated electronics. It provides the regulated 120VAC, 2 wire, or 120 / 240VAC, 3 wire (single phase only) output. Voltage regulation is maintained within one percent, throughout specified voltage ranges, from no load to rated load. An output control signal from the converter is connected to the governor control unit to vary engine speed depending on load condition. This enables the generator set to operate at lower engine speeds for light-load conditions while maintaining the required output voltage.

l. **Fuel System**. The generator set is equipped with a four-gallon fuel tank (1, Figure 1-4) which provides enough fuel to operate the unit for eight hours at full load. The tank is mounted within the skid base. The tank's filler assembly consists of a filler neck (2), fuel strainer (3), and vented fill cap (4). The tank contains a fuel pick-up connection (5), fuel return connection (6), fuel drain connection (7), fuel-gap sending unit (8), and fuel level switch (9).

An electric fuel pump (10) feeds fuel from the tank (1), through a combination fuel filter / water separator (11), on to the engine's fuel injection pump (12). The electric fuel pump (10) provides automatic fuel system priming and bleeding. An electronic governor actuator is connected, by linkage, to the fuel injection pump rack and is used for engine shutdown control.

An auxiliary fuel transfer pump (13) allows the generator set to operate using an auxiliary fuel source. A fuel strainer (14) is provided between the auxiliary fuel input connection (15) and the transfer pump. The transfer pump is controlled by the level switch, which allows fuel transfer from the auxiliary fuel source to the generator set fuel tank (1). Auxiliary fuel operations are controlled by the AUX FUEL switch (located on the generator set control panel). Refer to Paragraph 2-1, Operator's Controls and Indicators, for a complete explanation of each instrument and switch.

1-12. DIFFERENCES BETWEEN MODELS.

Generator set model MEP 831A is a 60 Hz generator set. MEP 832A is a 400 Hz generator set. In addition, MEP 831A (60 Hz) is equipped with both a ground fault circuit interrupter (13, Figure 1-2) and a convenience receptacle (15). MEP 832A does not contain these components.

1-13. EQUIPMENT DATA.

Refer to Table 1-2, Equipment Data, for a summary of specific capabilities, limitations, and critical data for operation and maintenance of the generator set.

1-14. IDENTIFICATION AND INSTRUCTION PLATES.

Figure 1-5 illustrates all operating instruction plates, information / data plates, and warning / caution plates found on the generator set.

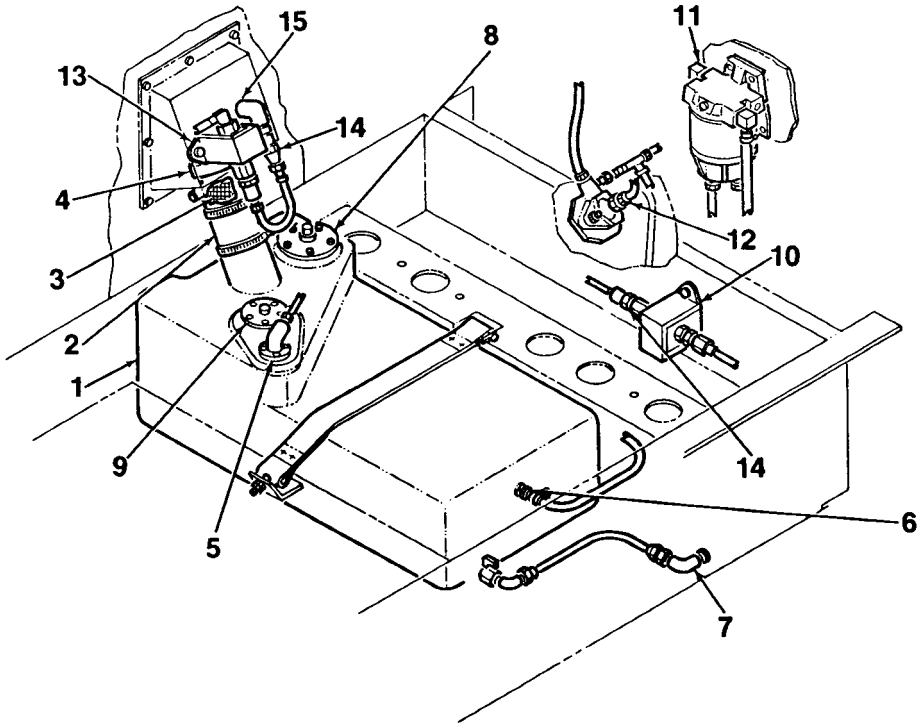

1. Fuel Tank
2. Filler Neck
3. Fuel Strainer
4. Fill Cap
5. Pick-Up Connection
6. Return Connection
7. Drain Connection
8. Sending Unit
9. Fuel Level Switch
10. Electric Fuel Pump
11. Fuel Filter / Water Separator
12. Fuel Injection Pump
13. Auxiliary Fuel Transfer Pump
14. Fuel Strainer
15. Auxiliary Fuel Input Connection

Figure 1-4. Generator Set Fuel System

Table 1-2. Equipment Data

WEIGHTS AND DIMENSIONS	
Weight (dry)	304.0 pounds (138.0 kilograms) maximum
Weight (wet) (full fuel tank)	334.0 pounds (151.6 kilograms) maximum
Length	34.8 inches (88.4 centimeters)
Width	27.8 inches (70.6 centimeters)
Height	26.5 inches (67.3 centimeters)
GENERAL SPECIFICATIONS	
Output power source	120 VAC convenience receptacle (60 Hz only)
Alternate starting aid	24 VDC slave receptacle
Battery	24 VDC, lead-acid type
Frequency rating:	
MEP 831A	60 Hz
MEP 832A	400 Hz
Rated voltage:	
1 phase, 2 wire	120 VAC
1 phase, 3 wire	120 / 240 VAC
Voltage adjustment range	114 to 126 V for the 120 V connection 228 to 252 V for the 240 V connection
Audio noise rating	72 dBA (max.) at 23 feet (7 meters) from perimeter of set, 47.25 inches (1.2 meters) above ground 85 dBA (max.) at operator's position
FUEL REQUIREMENTS	
Diesel fuel:	
A-A-52557, Type 1-D	-25°F to +20°F (-31°C to -7°C)
A-A-52557, Type 2-D	+20°F to +120°F (-7°C to +49°C)
Turbine fuel:	
MIL-T-83133, JP-8	-25°F to +120°F (-31°C to +49°C)
Fuel tank capacity	4.0 gallons (15.1 liters)
Auxiliary fuel system	Continual replenishment
Fuel consumption rate	0.5 gallons per hour at rated load
TRANSPORTATION	
Manual transport	Up to 6 personnel required (handles provided)
Truck, rail, air, and trailer transport	4 tie-down rings provided
Inclined transport angle	25° (max.) any direction

Table 1-2. Equipment Data (continued)

PERFORMANCE CHARACTERISTICS

Generator Set

Kilowatt capacity at altitude / temperature:	
1000 ft (718.1 mm Hg) at 107°F (41.7°C)	3.0 kilowatts
4000 ft (656.3 mm Hg) at 95°F (35.0°C)	2.7 kilowatts
8000 ft (564.9 mm Hg) at 95°F (35.0°C)	2.3 kilowatts
Output terminals:	
Alternating current	L1
Alternating current	L2
Neutral	N
Ground	GND

Diesel Engine

Manufacturer	Yanmar Diesel Engine Co., Ltd.
Model	L70AE-D/DE
Weight (dry)	86.0 pounds (39.0 kilograms)
Length	15.08 inches (38.3 centimeters)
Width	16.58 inches (42.1 centimeters)
Height	17.72 inches (45.0 centimeters)
Horsepower	6.7 horsepower (at operating speed)
Operating RPM	3000 to 3600 RPM
Maximum RPM	3800 RPM
No load RPM (governor controlled)	3000 to 3050 RPM
Rated load RPM (governor controlled)	3400 to 3450 RPM
Engine cooling system	Forced air cooling
Oil requirements:	
MIL-L-46167, OEA	-25°F to +40°F (-31°C to +5°C)
MIL-L-2104, OE/HDO-15/40	+5°F to +120°F (-15°C to +49°C)
MIL-L-2104, OE/HDO-10	-15°F to +40°F (-26°C to +5°C)
MIL-L-2104, OE/HDO-30	+15°F to +90°F (-9°C to +32°C)
MIL-L-2104, OE/HDO-40	+30°F to +120°F (-1°C to +49°C)
Oil capacity:	
Engine	1.2 quarts (1.1 liters)
Oil consumption rate	0.04 ounces (1.18 milliliters) per hour at rated load
Compression ratio	19.5
Bore x stroke	3.07 x 2.44 inches (78 x 62 millimeters)
Cylinder	1
Displacement	18.1 in^3 (296 cm^3)

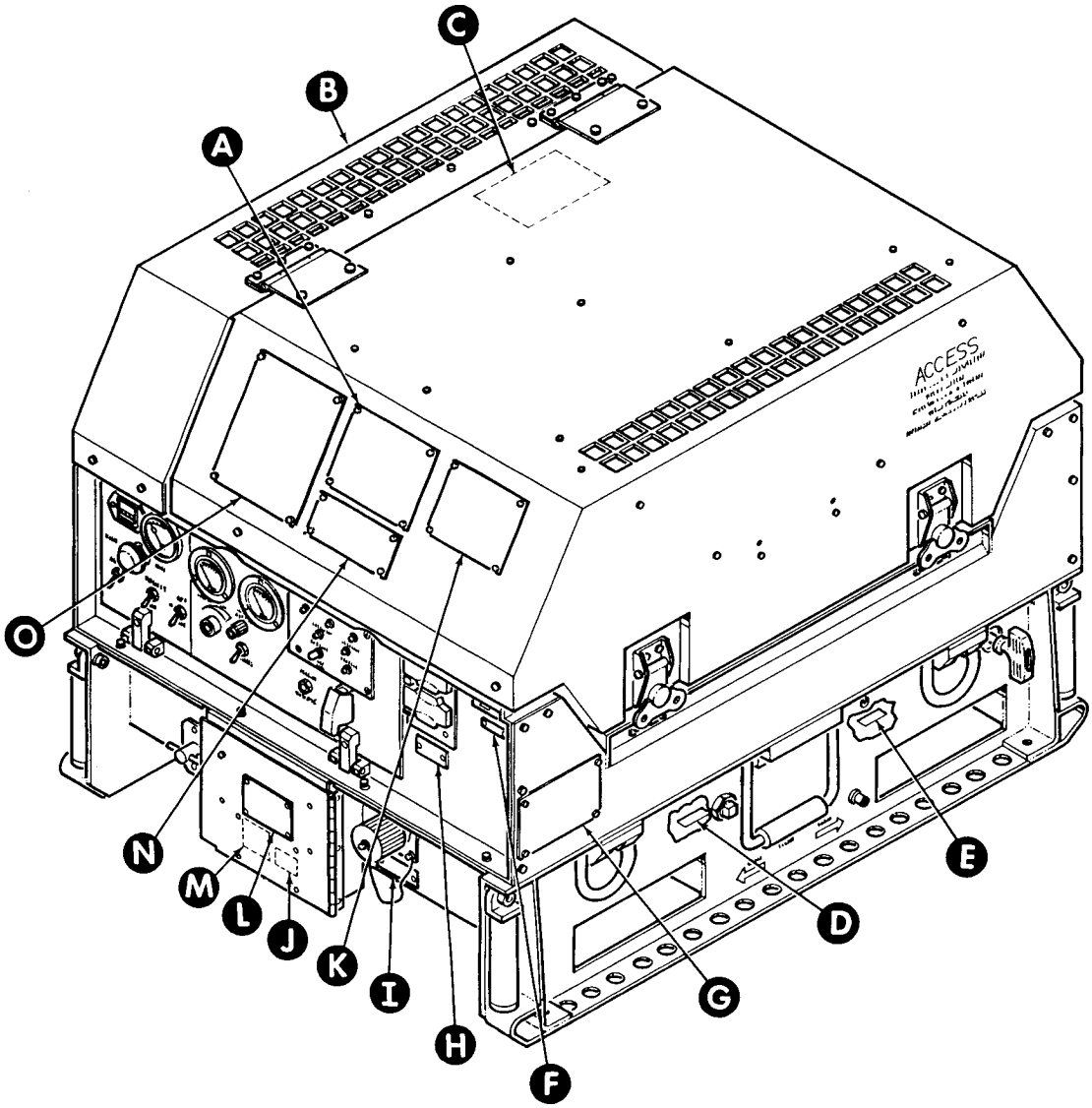

Figure 1-5. Generator Set Data, Instruction, and Warning Plates (Sheet 1 of 7)

U.S. DEPARTMENT OF DEFENSE
NATO STANDARD OTAN

GENERATOR SET DIESEL ENGINE 3KW 60HZ

MODEL MEP 831A NSN
SER NO. 0112- REG NO.
TM TM9-6115-639-13 NAVFAC -
TO 35C2-3-386-51 TM 10155A-13/1
VOLTS 120V 1PH, 120/240V 1PH
AMPS 31/16 PF 0.8
DRY WT 304 LB LG 34.8 IN W 27.8 IN HGT 26.5 IN
DATE MFD CONTR NO. DAAK01-96-C-0085
WARRANTY DATE INSP
MFD BY FERMONT INSP STAMP

U.S. DEPARTMENT OF DEFENSE
NATO STANDARD OTAN

GENERATOR SET DIESEL ENGINE 3KW 400HZ

MODEL MEP 832A NSN
SER NO. 0112- REG NO.
TM TM9-6115-639-13 NAVFAC -
TO 35C2-3-386-51 TM 10155A-13/1
VOLTS 120V 1PH, 120/240V 1PH
AMPS 31/16 PF 0.8
DRY WT 302 LB LG 34.8 IN W 27.8 IN HGT 26.5 IN
DATE MFD CONTR NO. DAAK01-96-C-0085
WARRANTY DATE INSP
MFD BY FERMONT INSP STAMP

Figure 1-5. Generator Set Data, Instruction, and Warning Plates (Sheet 2 of 7)

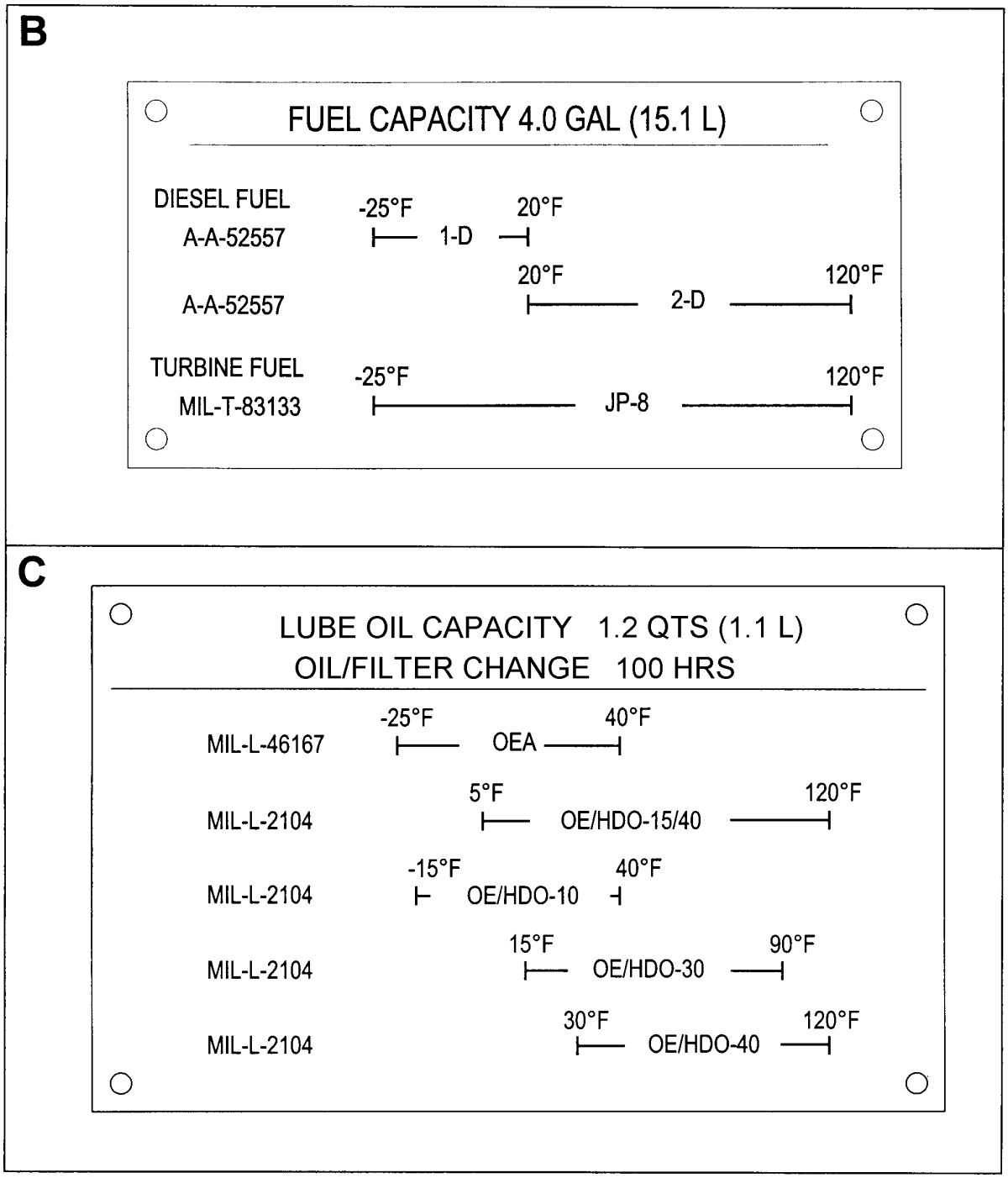

Figure 1-5. Generator Set Data, Instruction, and Warning Plates (Sheet 3 of 7)

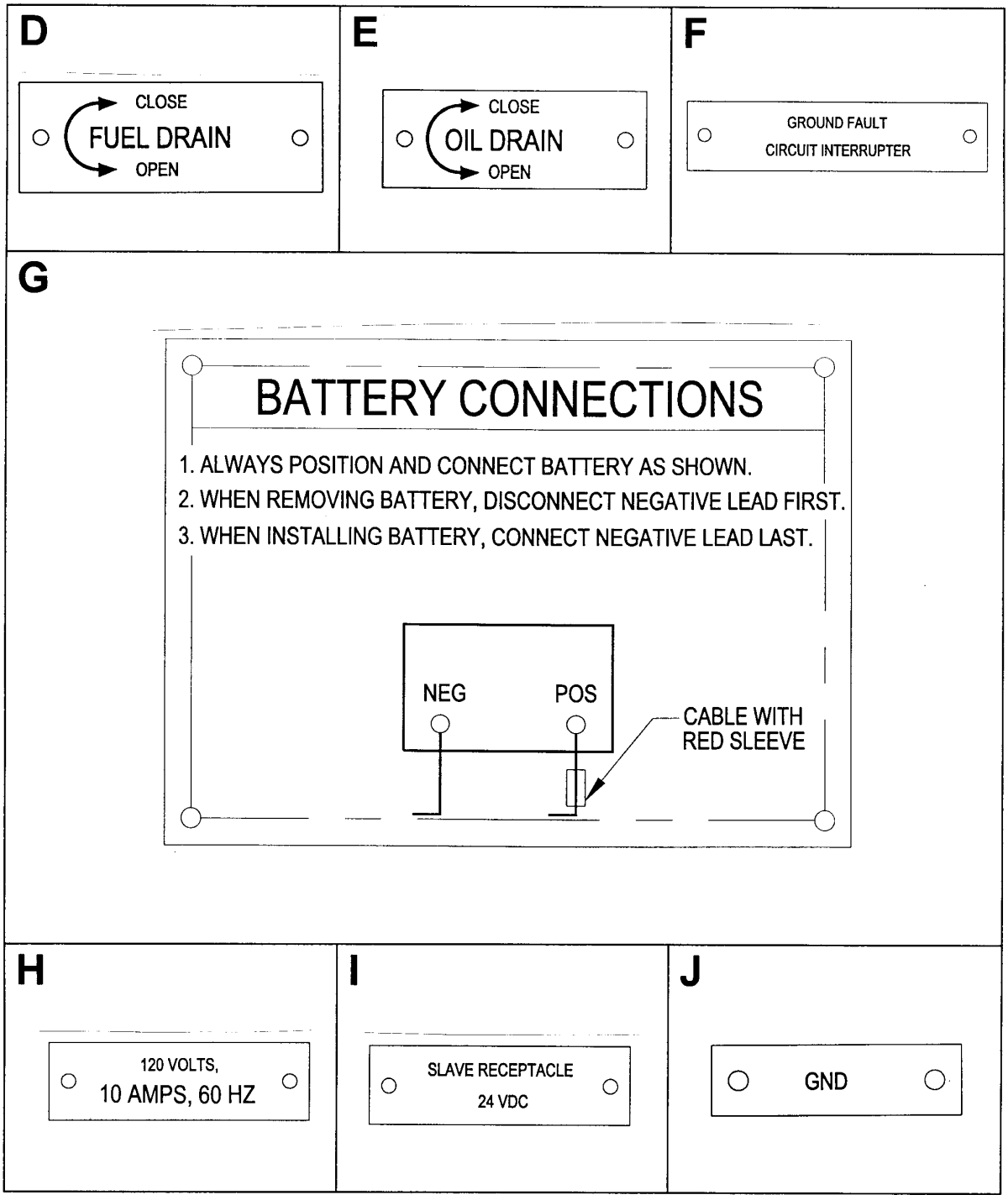

Figure 1-5. Generator Set Data, Instruction, and Warning Plates (Sheet 4 of 7)

K

KILOWATT CAPACITY		
KW	ALTITUDE	TEMP
3.0	1000 FEET (718.1 MM HG)	107°F (41.7°C)
2.7	4000 FEET (656.3 MM HG)	95° F (35°C)
2.3	8000 FEET (564.9 MM HG)	95°F (35°C)
HERTZ RATING	400	
RATED VOLTAGES, CURRENT AND PHASES	120 V, 31 AMPS, 1 PH, 2 WIRE	
	120/240 V, 16 AMPS, 1 PH, 3 WIRE	
VOLTAGE ADJUSTMENT RANGES	114/126 V - 120 VOLT CONNECTION	
	228/252 V - 120/240 VOLT CONNECTION	
POWER FACTOR	0.8	
TYPE 1,	MODE II	SIZE 3

KILOWATT CAPACITY		
KW	ALTITUDE	TEMP
3.0	1000 FEET (718.1 MM HG)	107°F (41.7°C)
2.7	4000 FEET (656.3 MM HG)	95°F (35°C)
2.3	8000 FEET (564.9 MM HG)	95°F (35°C)
HERTZ RATING	60	
RATED VOLTAGES, CURRENT AND PHASES	120 V, 31 AMPS, 1 PH, 2 WIRE	
	120/240 V, 16 AMPS, 1 PH, 3 WIRE	
VOLTAGE ADJUSTMENT RANGES	114/126 V - 120 VOLT CONNECTION	
	228/252 V - 120/240 VOLT CONNECTION	
POWER FACTOR	0.8	
TYPE 1,	MODE III	SIZE 3

Figure 1-5. Generator Set Data, Instruction, and Warning Plates (Sheet 5 of 7)

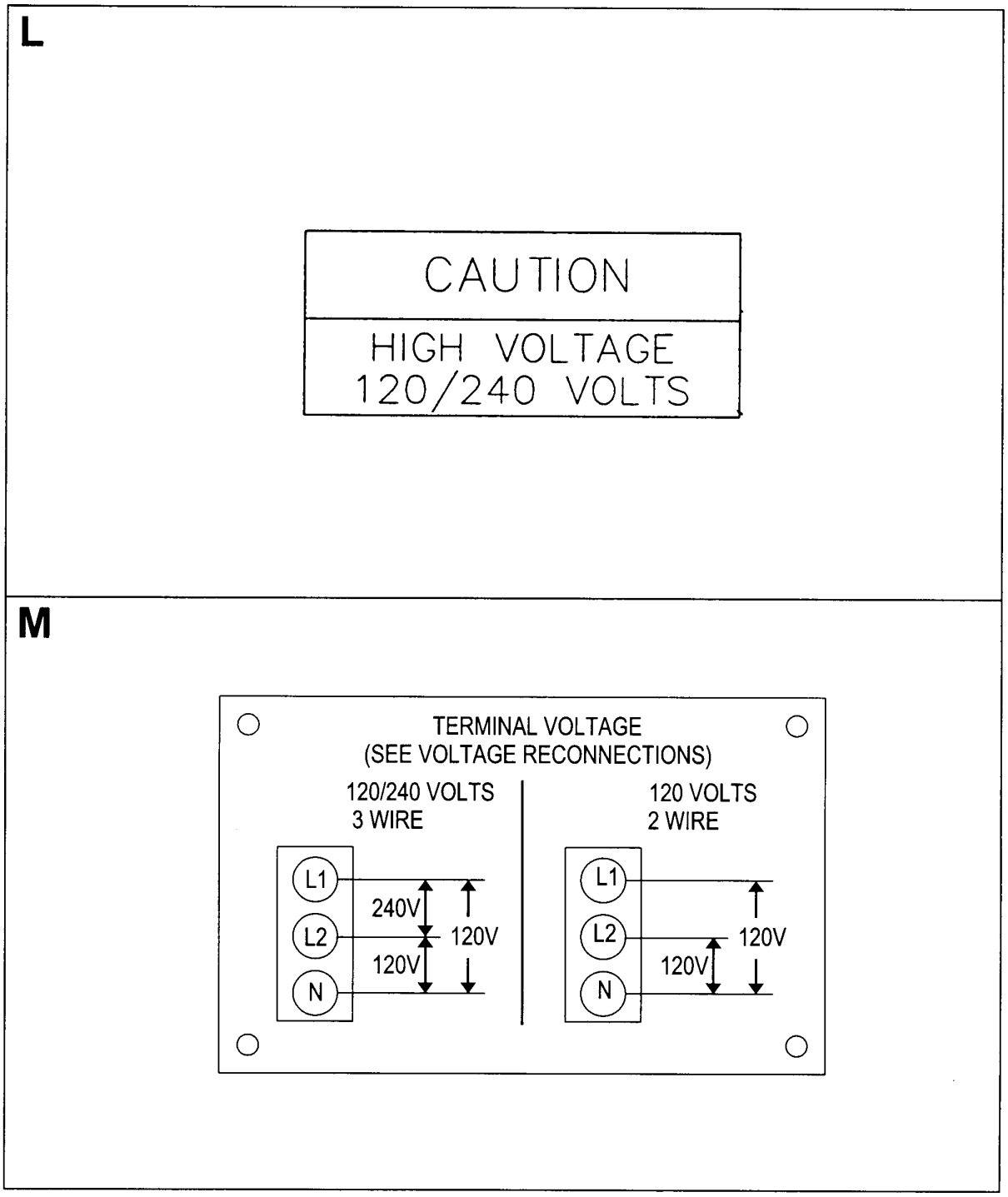

Figure 1-5. Generator Set Data, Instruction, and Warning Plates (Sheet 6 of 7)

N

CAUTION

GROUND SET BEFORE USE.

CLOSE DOOR TO RUN.

TO AVOID DAMAGE TO THE LOAD:
Check voltage of using equipment.

O

OPERATION

PREOPERATION

1. CHECK FUEL AND OIL LEVELS.
2. GROUND SET.
3. CHECK THAT FREQUENCY AND VOLTAGE MATCH LOAD.

TO OPERATE

1. IN COLD WEATHER, HOLD PREHEAT SWITCH ON FOR 10 TO 20 SECONDS, DEPENDING ON TEMPERATURE, THEN START.
2. START: PUSH AND HOLD START SWITCH IN START POSITION. RELEASE SWITCH TO RUN POSITION WHEN ENGINE STARTS. DO NOT CRANK MORE THAN 15 SECONDS AND WAIT 15 SECONDS BETWEEN CRANKS. IF SET DOES NOT START, SEE TM 9-6115-639-13
3. ADJUST VOLTAGE IF REQUIRED.
4. CLOSE CIRCUIT INTERRUPTER TO ENERGIZE LOAD TERMINALS.

TO STOP

1. OPEN CIRCUIT INTERRUPTER.
2. COOL DOWN FOR APPROXIMATELY 3 TO 5 MINUTES, THEN MOVE START SWITCH TO STOP.

Figure 1-5. Generator Set Data, Instruction, and Warning Plates (Sheet 7 of 7)

Section III. PRINCIPLES OF OPERATION

1-15. PRINCIPLES OF OPERATION.

The theory behind the operation of the generator set is described in the following paragraphs. Each system is dependent upon the other for efficient operation of the generator set. The information contained herein will assist direct support and general support maintenance personnel in understanding how the generator set functions. This knowledge will assist in isolating components which have failed.

1-16. ELECTRICAL SYSTEM.

The generator set has two electrical systems, direct current (DC), and alternating current (AC) (Figure FO-1). The DC system provides generator control circuitry, relay logic, and engine cranking. The AC system produces voltage for load application. Five test points (on terminal board TB3) provide malfunction isolation for critical components of the generator set.

1-17. DIRECT CURRENT SYSTEM. (Figure FO-1)

a. The direct current system (Figure FO-1) is powered by a 24 VDC battery (BT1). The battery is charged by the battery charging regulator (A9) when the engine is running. Engine cranking is initiated by placing the START / RUN / STOP switch (Sl, located on the control panel) in the START position. This signals engine start contactor (K2) to actuate the engine start solenoid (L4) and energize the starter motor (Bl).

b. With the START / RUN / STOP switch (Sl) in the START or RUN position, the engine fuel transfer pump (E2) is energized, allowing fuel to be injected into the engine. Placing the START / RUN / STOP switch in the RUN position de-energizes the starter motor (Bl). Placing the START / RUN / STOP switch in STOP position opens the circuit to the engine fuel transfer pump (E2) and the governor control (A5), stopping fuel flow to the engine. DC voltage is removed from the AC circuit interrupter coil, causing the contactor to open.

c. Pressing the EMERGENCY STOP switch (S19, located on the control panel) opens the AC circuit interrupter (K1) and disconnects power to the governor control (A5), which causes the generator set to shut down.

d. The generator set is equipped with an engine preheat system to help in cold-weather operation (below +20°F (-6.6°C)). Prior to starting the engine, the preheat mode may be actuated by placing the PREHEAT switch (S18, located on the control panel) in the ON position. This signals the engine preheat contactor (K13) to energize air heaters (H1 and H2). The air heater heats intake air which, in turn, assists in igniting fuel when injected into the engine combustion chamber.

e. Should engine oil temperature exceed normal operating temperature (+265°F), a heat sensitive temperature switch (HT) closes the circuit to energize the fault lockout relay (K12) and shut down the engine. The ENGINE HIGH TEMP indicator on the malfunction indicator module (A2) will illuminate. The fault lockout relay (K12) will lockout power to the engine until the FAULT RESET / LAMP TEST button on A2 is depressed. This safety mechanism prevents the operator from using the generator set until the malfunction has been corrected.

f. Should engine oil pressure drop below 15 psi, a low oil pressure switch (OP) closes the circuit to energize the fault lockout relay (K12) and shut down the engine. The LOW OIL PRESS indicator on the malfunction indicator module (A2) will illuminate. The FAULT RESET / LAMP TEST switch must be depressed to reset the fault lockout relay.

g. Relay K8, located in the power inverter / converter (A8), is energized if a short circuit or overload condition exists. The overload condition may be either a current overload or a real power (kW) overload. The AC circuit interrupter (K1) opens, disconnecting power from the load. The OVERLOAD SHORT CIRCUIT indicator on the malfunction indicator module (A2) will illuminate. Once the malfunction has been corrected, the malfunction indicator can be reset by depressing the FAULT RESET / LAMP TEST button. AC circuit interrupter (K1) can be closed.

h. Relay K6, located in the power converter (A8), is energized if a short circuit condition exists. The fault lockout relay (K12) will energize, stopping the engine. The system is reset by placing the START / RUN / STOP switch in the STOP position.

i. Relay K3, Located in the power converter (A8), is energized if an overvoltage condition exists. The fault lockout relay (K12) is energized, stopping the engine. The AC circuit interrupter (K1) opens, disconnecting power from the load. The OVER VOLTAGE indicator on the malfunction indicator module (A2) will illuminate. The fault lockout relay (K12) will lockout power to the engine until the FAULT RESET / LAMP TEST button on A2 is depressed.

j. The engine is supplied with a conventional mechanical governor. The maximum no load, mechanically governed speed is factory set to 3800 RPM. An electric governing system overrides the mechanical governor, regulating no load speed to 3000 to 3050 RPM and rated load speed to 3400 to 3450 RPM. During manual starting, the electric governor actuator is locked in position close to the full fuel position and the mechanical governor takes over.

k. In an emergency situation, the BATTLE SHORT switch (S7) can be activated to allow generator set operation under certain fault conditions. Placing the switch (located on the control panel) in the ON position bypasses all faults except overspeed and short circuit conditions. The BATTLE SHORT indicator on the malfunction indicator module (A2) will illuminate. The generator set will continue to operate under high temperature, low oil pressure, low fuel, overvoltage, or overload condition. The appropriate indicator light on A2 will illuminate. The engine cannot be started with the BATTLE SHORT switch in the ON position.

l. In generator set model MEP 832A (400 Hz), two thermostatically controlled DC ventilation fans (B2 and B3) are mounted in the generator set enclosure assembly. These fans provide internal cooling of the generator set under high temperature operating conditions. The fan temperature switches (S20 and S21) are set to turn on fan B2 when internal air temperature reaches 85°F (29°C), and fan B3 when internal air temperature reaches 110°F (43°C).

1-18. ALTERNATING CURRENT SYSTEM. (Figure FO-1)

a. The power for the alternating current electrical system (Figure FO-1) is provided by the permanent magnet generator (G1). The power converter (A1) converts this AC power electronically to 120 / 240V, 60 Hz or 400 Hz power.

b. In generator set model MEP 831A (60 Hz), a duplex convenience receptacle (Jl) provides power for common 120VAC appliance or tool loads. A ground fault circuit interrupter (CB3) protects both the convenience receptacle circuitry and the connected appliance should a ground fault occur.

Once the generator set reaches normal operating voltage (114 to 126 V for 120 V connection, 228 to 252 V for 240 V connection), the CIRCUIT INTERRUPTER switch (S5, located on the control panel) is placed in the CLOSED position. The AC circuit interrupter (Kl) closes, applying power converter output voltage to the output load terminal board (TB2, terminals Ll, L2, and N). Placing CIRCUIT INTERRUPTER switch (S5) in the OPEN position opens AC circuit interrupter, removing power converter output voltage from load terminals.

d. Voltage adjustment is accomplished using the VOLTAGE ADJUST rheostat (Rl), located on the control panel. Output from the power converter is displayed on a LOAD meter (M2) and a VOLTAGE meter (M1). Both meters are located on the control panel.

e. In generator set model MEP 831A (60 Hz), two thermostatically controlled AC ventilation fans (B2 and B3) are mounted in the generator set enclosure assembly. These fans provide internal cooling of the generator set under high temperature operating conditions. The fan temperature switches (S20 and S21) are set to turn on fan B2 when internal air temperature reaches 85°F (29°C), and fan B3 when internal air temperature reaches 110°F (43°C).

1-19. GENERATOR. (Figure FO-1)

a. The AC generator (G1, Figure FO-1) is a direct coupled, permanent magnet generator. The rotor and fan are dynamically balanced at all speeds up to 125 percent rated speed to minimize vibration. The windings and coils in the stator assembly use Class H insulating material. Temperature rise of the windings is limited to a change of 221°F (105°C) (max.).

b. The generator produces voltage by rotating permanent magnets in the rotor past a stator winding. The magnetized poles of the rotor have alternate north and south polarity. The magnetic flux lines leave each north pole of the rotor, pass through the stator, and return to the adjacent south poles of the rotating field.

NOTE

The power inverter / converter (A8) converts generator output to a 120 / 240V, 60 Hz or 400 Hz output, regardless of engine speed. The electric governor varies the engine speed in proportion to the kilowatt load on the generator set.

c. As the rotor turns, voltage is induced in the stator windings. The stator voltage output is connected to the static power inverter / converter (A8). Voltage output can be varied using the VOLTAGE ADJUST rheostat (R1). Frequency output is not adjustable.

1-20. FUEL SYSTEM. (Figure 1-6)

a. The generator set fuel system (Figure 1-6) consists of a 4.0 gallon (15.1 liter) fuel supply tank, fuel transfer pumps, fuel filter / water separator, auxiliary fuel intake system, and engine fuel components. The fuel tank is sized to contain enough fuel to operate the generator set for eight (8) hours at full load using any of the specified fuels. The tank is connected to a fuel fill pocket, which contains a vented fill cap (4), fuel filler neck, and fuel strainer (5). A tank drain valve (11) is located at the base of the tank.

b. The engine fuel supply line passes fuel from the fuel tank, through a fuel filter / water separator (13), a fuel transfer pump (12), and a fuel injection pump (7), into the fuel injector (6). The fuel filter / water separator removes micro-particles and separates water from the fuel flow. Water collects in the filter / water separator bowl where it can be drained.

c. The generator set fuel system is equipped with two fuel transfer pumps: primary (12) and auxiliary (1). The primary fuel transfer pump (12) feeds fuel from the fuel tank to the engine injection system. When the START / RUN / STOP switch (S1, Figure FO-1) is placed he START or RUN position, the primary fuel transfer pump is energized. Fuel flows to the fuel injection pump (7, Figure 1-6). The pump provides the pressurized fuel to operate the fuel injector (6).

d. For generator set operation from an auxiliary fuel source, the auxiliary fuel hose is connected to the set at the auxiliary fuel connection (2). The AUX FUEL switch (14, located on the control panel) is placed in the ON position. A three-position float switch (3) monitors tank fuel level and controls auxiliary fuel system components. If fuel is below float switch FL2B, the auxiliary fuel transfer relay (15) energizes and activates the auxiliary fuel pump (1). The auxiliary fuel pump will begin operation and draw fuel from the auxiliary source until the fuel level in the tank rises above float switch FL2A. Once the fuel level rises above switch FL2A, the switch will open and de-energize the relay (15). The level monitoring / servicing cycle will continue until the AUX FUEL switch (14) is placed in the OFF position.

e. If, at any time during operation, the tank fuel level drops below float switch FL1, the fault lockout relay (10) will open and de-energize the governor actuator (8) and governor control (9), cutting off fuel to the engine. This prevents the fuel system from running dry, causing loss of prime in the fuel injection pump (7). The NO FUEL indicator on the fault isolation module will illuminate and the generator set will immediately shut down. Once the fault lockout relay (10) has been actuated, the engine will not run until the FAULT RESET button on the malfunction indicator module has been depressed.

f. If fuel level drops below float switch FL2B and an auxiliary fuel source is not available, the generator set will continue to operate for 3 to 4 hours before float switch FL1 is actuated and shutdown occurs.

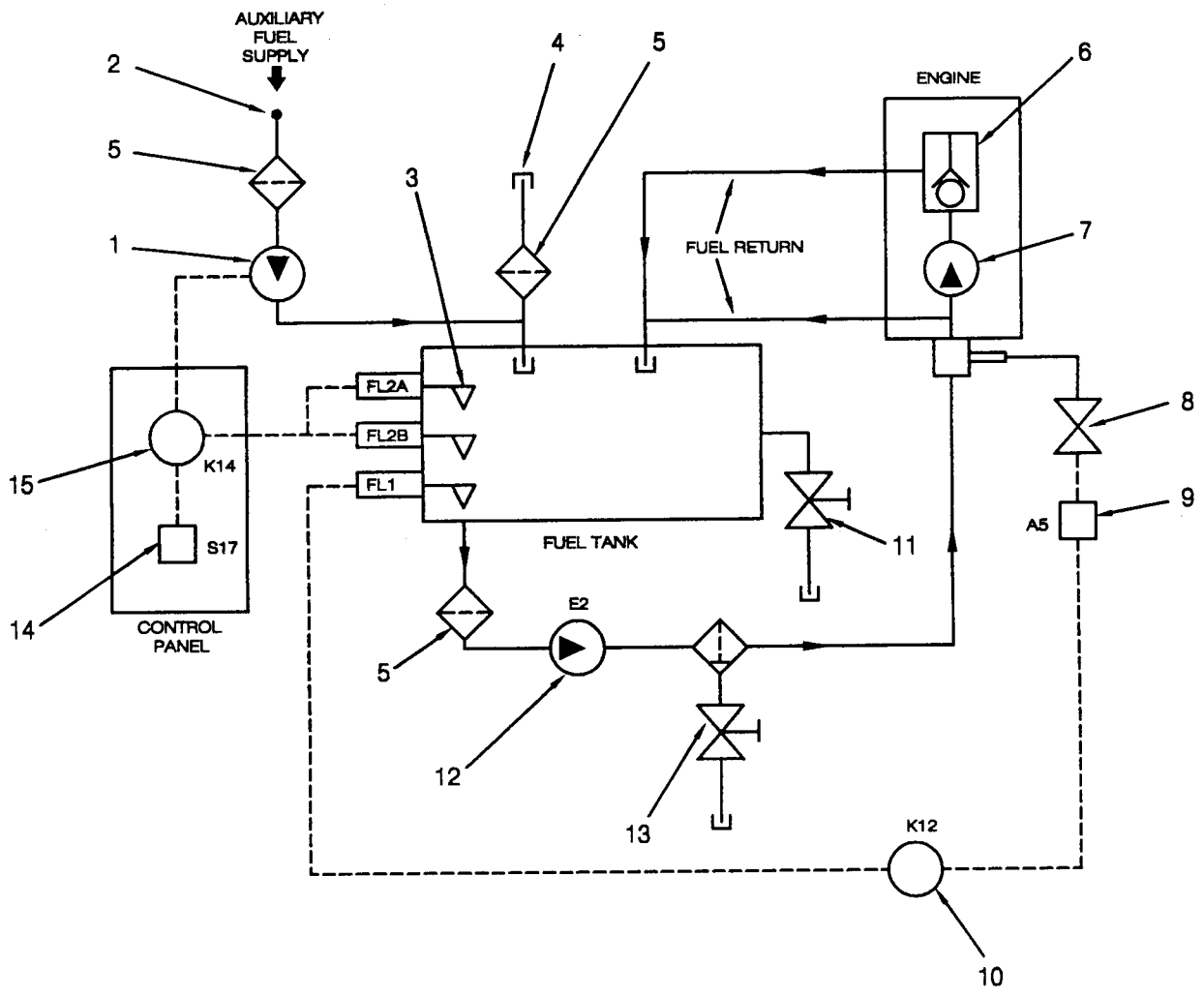

1. Auxiliary Fuel Pump
2. Auxiliary Fuel Connection
3. Float Switch
4. Fill Cap
5. Fuel Strainer
6. Fuel Injector
7. Injection Pump
8. Governor Actuator
9. Governor Control
10. Fuel Lockout Relay
11. Tank Drain Valve
12. Fuel Transfer Pump
13. Fuel Filter / Water Separator
14. AUX FUEL Switch
15. Auxiliary Fuel Transfer Relay

Figure 1-6. Fuel System Schematic

This page
Intentionally
Left blank

CHAPTER 2
OPERATING INSTRUCTIONS

Section I DESCRIPTION AND USE OF OPERATORS CONTROLS AND INDICATORS 2-2

2-1 Operators Controls and Indicators 2-2

Section II OPERATOR PREVENTIVE MAINTENANCE CHECKS AND SERVICES (PMCS) 2-8

2-2 General 2-8
2-3 PMCS Procedures 2-8
2-4 Cleaning Agents 2-10
2-5 Leakage Definitions for Operator PMCS 2-11

Section III OPERATION UNDER USUAL CONDITIONS 2-19

2-6 Assembly and Preparation for Use 2-19
2-7 Initial Adjustments, Daily Checks, and Self Test 2-23
2-8 Operating Procedures 2-24
2-9 Generator Set Shut Down 2-26
2-10 Emergency Shut Down 2-26
2-11 Operation of Auxiliary Equipment 2-26
2-12 Operating Instructions on Decals and Instruction Plates 2-26

Section IV OPERATION IN UNUSUAL CONDITIONS 2-28

2-13 Battle Short Operation 2-28
2-14 Operation in Unusual Weather 2-28
2-15 Nuclear, Biological, and Chemical (NBC) Decontamination Procedures 2-29
2-16 Hand Starting (Manual Engine Cranking) 2-30

Section I. DESCRIPTION AND USE OF OPERATORS CONTROLS AND INDICATORS

2-1. OPERATORS CONTROLS AND INDICATORS.

Prior to placing the generator set into operation, personnel must be familiar with the location and function of all switches, controls, and indicators. Controls and indicators required for generator set operation are described below and identified in Figure 2-1. Refer to the generator set electrical schematic, Figure FO-1, for reference designations.

1 HOURS Meter (M3)
Indicates hours of generator set operation.

2 FUEL LEVEL Meter (M5)
Indicates amount of fuel remaining in the generator set fuel tank.

3 VOLTAGE Meter (M1)
Indicates generator set output voltage.

4 LOAD Meter (M2)
Indicates generator load in kilowatts.

5 DC CIRCUIT BREAKER (CB1)
Trips to stop generator set operation in case of electrical surge in DC control system. Push to reset breaker.

6 Fault Indication Module (A2)
Contains lights that indicate generator set operating conditions. Includes the following indicator lights:

ENGINE HIGH TEMP fault (red)
LOW OIL PRESSURE fault (red)
NO FUEL fault (red)
OVERVOLTAGE fault (red)
OVERLOAD SHORT CIRCUIT fault (red)
BATTLE SHORT ON operation (yellow)

Dual purpose FAULT RESET / PUSH TEST switch allows operator to test indicator lights before operation, and reset fault isolation module after fault has been remedied.

7 BATTLE SHORT Switch (S7)
Two-position switch that allows generator set operation under certain fault conditions.

ON position bypasses all faults except short circuit conditions. BATTLE SHORT indicator on fault indicator module A2 (see item 6) will light when switch is in ON position.

OFF position returns generator set to normal operating mode, allowing faults to halt generator set operation.

8 Convenience Receptacle (J1) (60Hz only)
Single phase duplex receptacle which allows 120VAC appliance or tool connection.

9 GROUND FAULT CIRCUIT INTERRUPTER (GFCI) (CB3) (60Hz only)
Provides automatic circuit interruption and circuit protection for the convenience receptacle (J1).

10 SLAVE RECEPTACLE (SR1)
Allows for 24VDC auxiliary power connection for starting generator set. NATO style.

11 GND Terminal
Generator set ground terminal.

12 L1, L2, N Terminals
Generator set alternating current (L1, L2) and neutral (N) terminals.

13 CIRCUIT INTERRUPTER Switch (S5)
Two position switch that applies generator voltage to the output load terminal board.

CLOSED position signals AC circuit interrupter K1 to close, applying voltage to the terminal board.

OPEN position opens AC circuit interrupter K1, terminating current to the load.

14 CIRCUIT INTERRUPTER Indicator (DS6)
Lights when CIRCUIT INTERRUPTER switch S5 is in CLOSED position, indicating load is being applied to the terminal board.

15 VOLTAGE ADJUST Rheostat (R1)
Allows operator to adjust generator set output voltage.

16 START / RUN / STOP Switch (S1)
Three-position switch that controls generator set operation.

START position activates engine starter B1. Spring loaded. Must be held in position.

RUN position cuts electrical power to the starter. Energizes all circuits required for normal operation.

OFF position opens the circuit to engine fuel transfer pump E2 and governor control A5, stopping fuel flow to the engine and shutting down the generator set.

17 PREHEAT Switch (S18)
Two-position switch that controls the engine preheat system.

ON position sends a signal to engine preheat contactor K13 to energize the engine air heater. Used during cold weather operation.

OFF position de-energizes the engine air heater, halting engine preheat operations.

18 AUX FUEL Switch (S17)
Two-position switch that allows the generator set to operate using an auxiliary fuel source.

ON position allows a three-position fuel level switch (FL, mounted in the generator set fuel tank) to regulate auxiliary fuel flow into the fuel tank. See item 25 for details.

OFF position de-energizes auxiliary fuel circuit, preventing auxiliary fuel pump E1 from operating.

19 EMERGENCY STOP Switch (S19)
A push-button switch that opens AC circuit interrupter K1 and disconnects power to governor control A5, which causes generator set to shut down. For emergencies only.

20 Engine Start Handle
Allows for manual start of the generator set engine. Activates engine's recoil starter assembly.

21 Fuel Drain Plug
Allows personnel to drain generator set fuel tank. Connected to a fuel drain line.

22 Engine Oil Drain Plug
Allows personnel to drain engine oil sump. Connected to an oil drain line.

23 Temperature Switch (S21)
Monitors temperature inside the generator set enclosure. Activates ventilation fan B3 when temperature reaches 110°F (43°C).

24 Temperature Switch (S20)
Monitors temperature inside the generator set enclosure. Activates ventilation fan B2 when temperature reaches 85°F (29°C).

25 Fuel Level Switch (FL)
Three-position float switch that monitors fuel level in the generator set fuel tank. Controls auxiliary fuel transfer relay K14 when the AUX FUEL switch (see item 18) is in ON position.

When fuel level is below switch FL2B, auxiliary fuel transfer relay K14 energizes and activates auxiliary fuel pump E1 to begin fuel pumping.

When fuel level rises above switch FL2A, transfer relay opens, deactivating pump.

If fuel drops below switch FL1, fault lockout relay K12 will open and de-energize governor control A5 (see item 28), cutting off fuel to engine. The NO FUEL indicator on fault indicator module A2 will light (see item 6).

26 Fuel Level Sender (MT5)
Sends generator set fuel tank level data to FUEL LEVEL meter M5 (see item 2).

27 Lubricating Oil Pressure Switch (OP)
Monitors engine oil pressure. If oil pressure drops below 15 psi, the switch closes the circuit to energize fault lockout relay K12 and shut down engine. The LOW OIL PRESSURE indicator on fault indicator module A2 will light (see item 6).

28 Governor Control (A5)
Controls engine's mechanical governor to adjust engine speed.

29 Engine Temperature Switch (HT)
Monitors engine temperature. If engine temperature rises above 265°F (129°C), the switch closes the circuit to energize fault lockout relay K12 and shut down engine. The ENGINE HIGH TEMP indicator on fault indicator module A2 will light (see item 6).

30 Engine Oil Fill Cap and Gauge
Allows for engine oil servicing. Gauge in cap measures crankcase oil level.

31 Fuel Fill Cap
Allows for generator set fuel servicing using a fill tank or fuel nozzle. Includes a mesh fuel strainer.

32 Auxiliary Fuel Cap
Allows for connection of an auxiliary fuel hose.

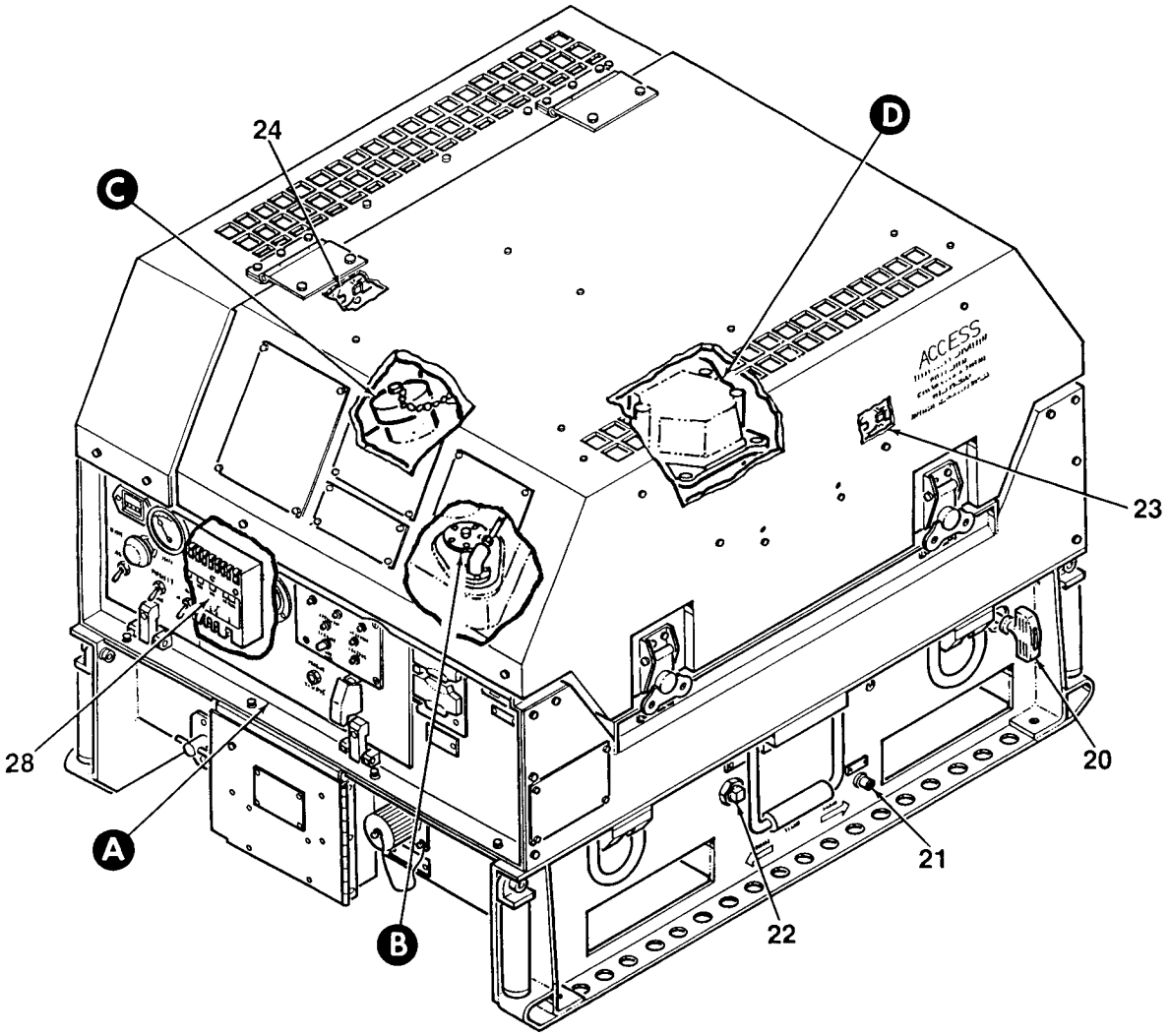

Figure 2-1. Generator Set Controls and Indicators
(Sheet 1 of 3)

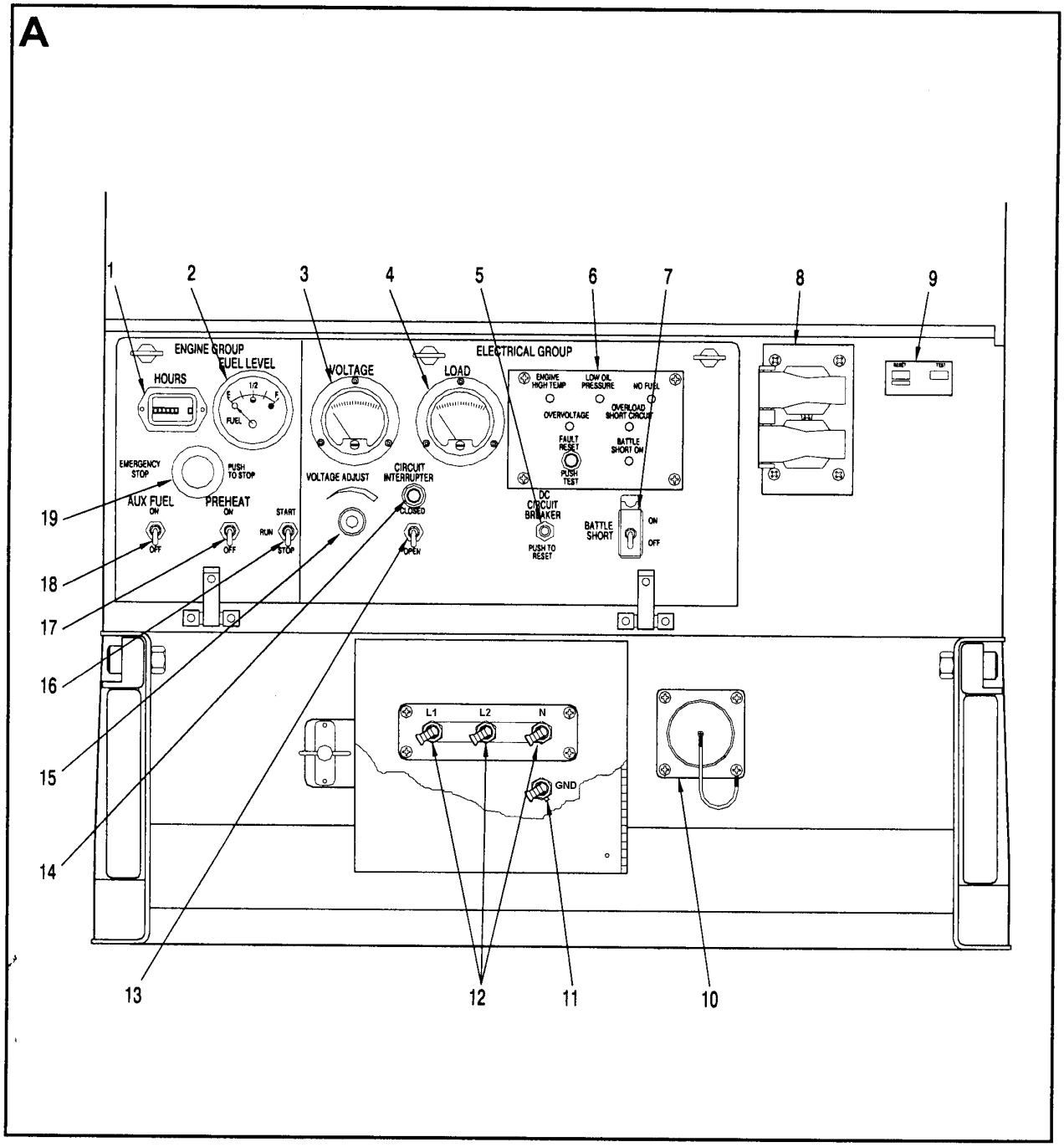

Figure 2-1. Generator Set Controls and Indicators
(Sheet 2 of 3)

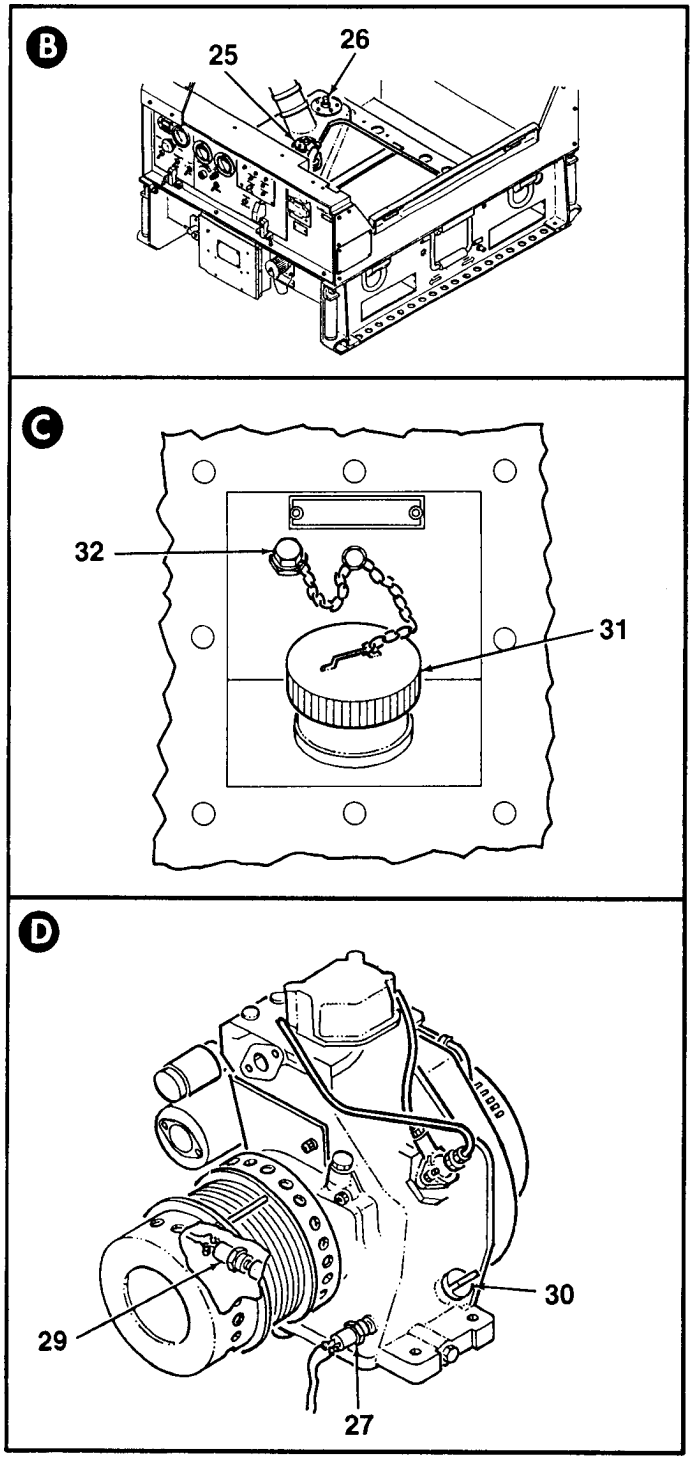

Figure 2-1. Generator Set Controls and Indicators (Sheet 3 of 3)

Section II. OPERATOR PREVENTIVE MAINTENANCE CHECKS AND SERVICES (PMCS)

2-2. GENERAL.

Operator Preventive Maintenance Checks and Services (PMCS) means systematic caring, inspecting, and servicing of equipment to keep it in good condition and to prevent breakdowns. As the generator set operator, your mission is to ensure that the generator set is ready for operation at all times. It must be inspected so that defects can be discovered and corrected before they result in damage or failure.

a. Be sure to perform your PMCS as indicated. Always do your PMCS in the same order, so it gets to be a habit. Once you have had some practice, you will quickly spot anything wrong.

b. Do your BEFORE (B) PMCS before you operate the generator set. Pay attention to WARNINGS, CAUTIONS, and NOTES.

c. Do your DURING PMCS while you operate the generator set. Monitor the generator set and its related components while it is actually being operated. Pay attention to WARNINGS, CAUTIONS, and NOTES.

d. Do your AFTER PMCS right after operating the generator set. Pay attention to WARNINGS, CAUTIONS, and NOTES.

e. Do your WEEKLY PMCS once a week.

f. If your equipment does not perform as required, refer to Chapter 3, under Troubleshooting, for possible problems. Use DA Form 2404 (Equipment Inspection and Maintenance Worksheet) to record any faults you discover before, during, or after operation.

g. Be prepared to assist unit maintenance when they lubricate the generator set. Perform any other services when required by unit maintenance.

2-3. PMCS PROCEDURES.

a. Your Preventive Maintenance Checks and Services, Table 2-1, lists inspections and care required to keep your generator set in good operating condition. It is set up so you can make your BEFORE (B) OPERATION checks as you walk around the generator set.

b. **Item No. Column.** The Item No. column in Table 2-1 lists each check / service in chronological order.

c. **Interval Column.** The Interval column tells you when to do a certain check or service. Intervals are based on operating hours, unless otherwise noted.

d. **Location Column.** The Location: Item to Check / Service column directs maintenance personnel to the general area on the generator set where the check or service is to be performed.

e. **Procedure Column.** The Procedure column of Table 2-1 tells you how to do required checks and services. Tolerances, adjustment limits, and instrument readings are included as applicable. When replacement or repair of a component is required, the procedures column will direct you to the appropriate task.

NOTE

Terms "ready/available" and "mission capable" refer to same status: Equipment is on hand and ready to perform its combat missions. (See DA Pam 738-750).

f. **Not Fully Mission Capable If Column.** The Not Fully Mission Capable If column in Table 2-1 tells you when your generator set is non-mission capable and why the engine assembly cannot be used.

g. If the generator set does not perform as required, refer to Chapter 3, Troubleshooting.

h. If anything looks wrong and you cannot fix it, write it on your DA Form 2404. IMMEDIATELY report it to your supervisor.

i. When you perform PMCS you will always need a rag or two. Following are checks that are common to the entire generator set:

(1) Keep It Clean. Dirt, grease, oil, and debris only get in the way and may cover up a serious problem. Clean as you work and as needed. Use dry cleaning solvent on all metal surfaces. Use soap and water when you clean rubber or plastic material.

(2) Rust and Corrosion. Check components for rust and corrosion. If any bare metal or corrosion exists, clean, and apply a thin coat of oil. Report it to your supervisor.

(3) Bolts, Nuts, and Screws. Check them for obvious looseness, missing, bent, or broken condition. You cannot try them all with a tool, but look for chipped paint, bare metal, or rust around bolt heads. If you find a bolt, nut, or screw you think is loose, tighten it or report it to your supervisor.

(4) Welds. Look for loose or chipped paint, rust, or gaps where parts are welded together. If you find a bad weld, report it to your supervisor.

(5) Electric Wires and Connectors. Look for cracked, frayed, or broken insulation, bare wires, and loose or broken connectors. Tighten loose connectors. Report any damaged wires to your supervisor.

(6) Hoses and Fluid Lines. Look for wear, damage, and leaks, and make sure clamps and fittings are tight. Wet spots show leaks, but a stain around a fitting or connector can also mean a leak. If a leak comes from a loose fitting or connector, tighten it. If something is broken or worn out, report it to your supervisor.

h. When you check for "operating condition" you look at the component to see if it is serviceable.

2-4. CLEANING AGENTS.

WARNING

Cleaning solvents are flammable and toxic to eyes, skin, and respiratory tract. Skin and eye protections are required when working in contact with cleaning solvents. Avoid prolonged or repeated contact. Work in well ventilated area only. Keep away from heat, sparks, and open flame. Do not smoke while using cleaning solvent. Failure to observe this warning can result in injury or death to personnel

CAUTION

When cleaning inside of enclosure, engine must be COLD (same temperature as outside air). DO NOT point water stream directly at any electrical connection. DO NOT use high pressure water supply system. Damage to engine, electrical system, and other components may result.

NOTE

Only use those authorized cleaning solvents or agents listed in Appendix E, Expendable and Durable Items List.

a. When using water to clean the generator set enclosure, always cover all air ducts and exhaust ports with waterproof material. Cover NATO receptacle, fuel fittings, control box assembly, and output panel. Use water pressure and volume similar to a standard household water supply (50 PSI maximum, 3 gallons per minute).

b. After cleaning, allow generator set to air dry. Do not use compressed air to dry unit. Do not run engine to decrease drying time.

c. Remove all waterproof material applied in step a. from ducts and other components before starting generator set.

CAUTION

Keep cleaning solvents, gasoline, and lubricants away from rubber or soft plastic parts. They will deteriorate material.

d. When cleaning grease buildup or rusty places, use a cleaning solvent, then apply a thin coat of light oil to affected area.

2-5. LEAKAGE DEFINITIONS FOR OPERATOR PMCS.

It is necessary for you to know how fluid leakage affects the generator set. Following are types/classes of leakage an operator needs to know to be able to determine the status of the generator set. Learn these leakage definitions and remember: When in doubt, notify your supervisor.

WARNING

Class III oil leaks should be reported IMMEDIATELY to your supervisor. Fuel leaks of any kind require immediate system shutdown. Failure to observe this warning can result in personal injury.

CAUTION

Equipment operation is allowable with Class I or Class II oil leakage. Of course, consideration must be given to fluid capacity in the item/system being checked/inspected. When in doubt, notify your supervisor.

When operating with Class I or II oil leaks, continue to check fluid levels as required in your PMCS.

a. CLASS I - Seepage of fluid (as indicated by wetness or discoloration) not great enough to form drops.

b. CLASS II - Leakage of fluid great enough to form drops but not enough to cause drops to drip from item being checked/inspected.

c. CLASS III - Leakage of fluid great enough to form drops that fall from item being checked/inspected.

Table 2-1. Operator Preventive Maintenance Checks and Services for MEP 831A / 832A

Item No.	Interval	Location: Item to Check/ Service	Procedure	Not Fully Mission Capable If:
1	Before	Overall generator set	a. Inspect for cracks, dents, and corrosion in accordance with para. 3-5. b. Inspect for loose or missing hardware.	Significant cracks in any generator set component.
2	Before	Generator set enclosure	a. Inspect top lifting cover for security of attachment in accordance with para. 3-5. b. Inspect air intake and exhaust ducts for obstructions and blockages. Clear obstructions and check for damage.	Cover is not secure. Latches do not lock, allowing cover to rattle excessively. Intake or exhaust are blocked, or damaged.
3	Before	Control box and output panel	a. Inspect for secure attachment. Check that hinged panel is closed and locked. b. Inspect switches, meters, indicators, and terminals. Conduct fault lamp test by depressing FAULT RESET / PUSH TEST switch. Refer to para. 3-6. c. Inspect electrical wires for damage, corrosion, or electrical short. Check for bent, broken, or missing pins. 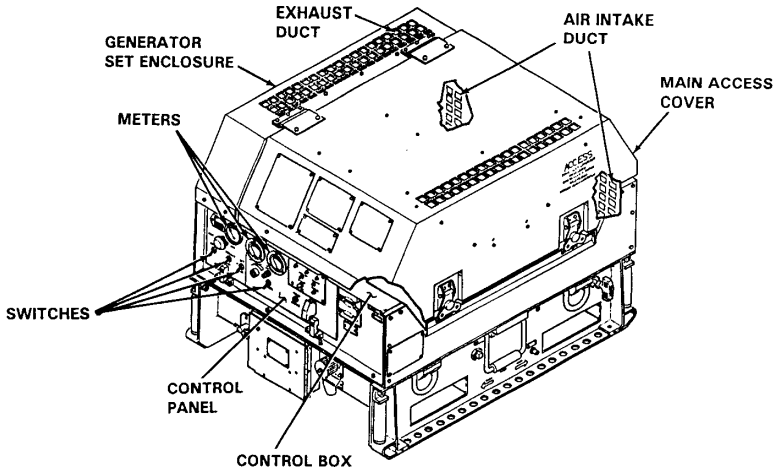 	Switch is not operable or meter is damaged. Fault indicator is defective or lamp does not light. Wires or connectors are damaged.

Table 2-1. Operator Preventive Maintenance Checks and Services for MEP 831A / 832A (continued)

Item No.	Interval	Location: Item to Check/ Service	Procedure	Not Fully Mission Capable If:
4	Before	Convenience receptacle (60Hz only)	Inspect receptacle for damage. Check for signs of electrical short or corrosion.	Receptacle damaged, shorted, or corroded.
5	Before	NATO slave receptacle	Inspect receptacle for damage. Check for signs of electrical short or corrosion.	Receptacle damaged, shorted, or corroded.
6	Before	Output panel	a. Inspect output panel door for security. Check that locking latch operates properly. **WARNING:** Ensure generator set is properly grounded prior to starting. Failure to properly ground can result in serious injury or death through electrocution. b. Check load and ground terminals for security of attachment. Inspect for signs of electrical short or corrosion. c. Check ground rod cable for proper installation. Check for correct connection. 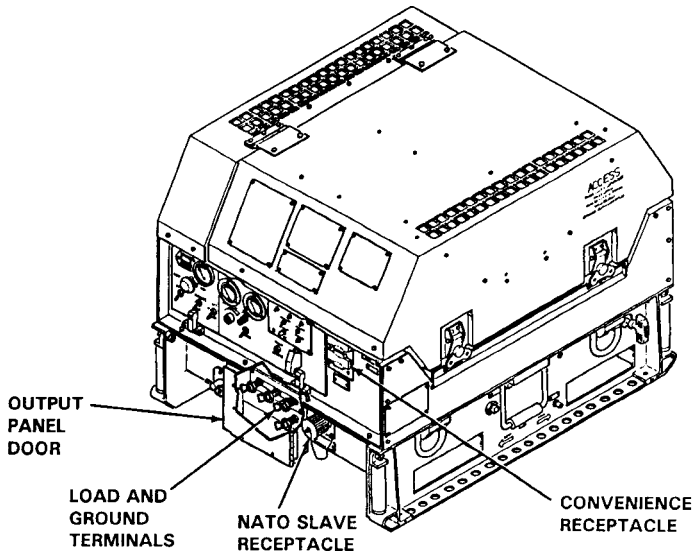 	Terminals are loose, disconnected, shorted, damaged, or corroded. Set is not grounded properly.

Table 2-1. Operator Preventive Maintenance Checks and Services for MEP 831A / 832A (continued)

Item No.	Interval	Location: Item to Check/ Service	Procedure	Not Fully Mission Capable If:
7	Before	Exhaust system	a. Inspect exhaust system for cracks, holes, or dents. Ensure secure attachment. b. Inspect muffler for obvious damage.	Exhaust system is damaged to the extent it will effect operation or safety of personnel.
8	Before	Fuel fill ports	a. Inspect fill neck strainer for damage. Remove obstructions or blockage. b. Inspect vented fuel cap and auxiliary fuel connection for obvious damage or leakage. Check that caps are securely attached.	Strainer is damaged. Fuel cap is damaged to the point where fuel leakage is likely.
9	Before	Fuel tank and hoses	Inspect generator set and engine fuel system components for damage or leaks in accordance with para. 3-7.	Fuel leaks of any kind are present. Fuel line is cut or damaged.
10	Before	Fuel filter / water separator	Inspect and drain filter / separator in accordance with para. 3-8.	Water and fuel are mixed. Separator is damaged or leaking.

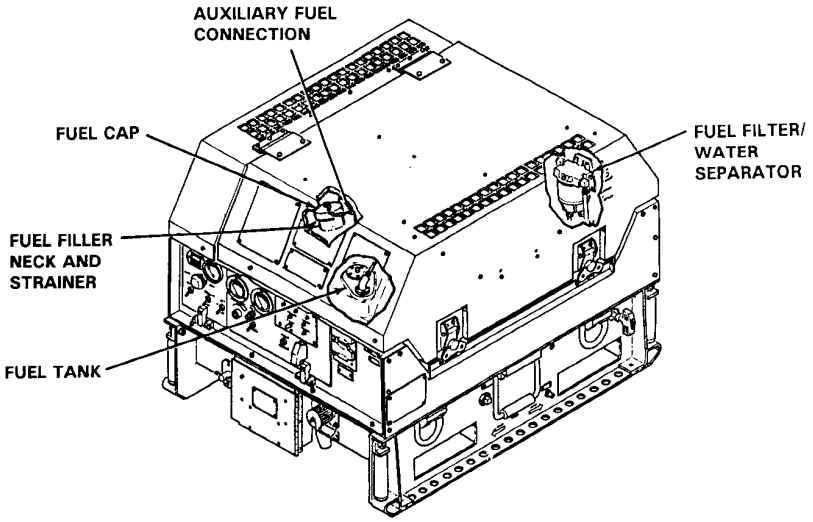

Table 2-1. Operator Preventive Maintenance Checks and Services for MEP 831A / 832A (continued)

Item No.	Interval	Location: Item to Check/ Service	Procedure	Not Fully Mission Capable If:
11	Before	Skid base	a. Inspect oil and fuel drain ports for damage. Ensure drain plugs are securely attached. b. Inspect lifting handles and tie down rings for damage. Check security of attachment. c. Inspect engine vibration mounts for cracks, wear, or deterioration.	Drain ports are damaged to the extent they will leak. Lifting handles do not operate or are loose. Vibration mounts are damaged or worn.
12	Before	Engine oil	a. Open enclosure cover. Remove oil fill cap and check oil level. If servicing is required, refer to para. 3-1. b. Inspect areas around oil filter and oil drain hose for leaks.	Class III oil leaks are present. Refer to leakage class definitions (para. 2-5).
13	During	VOLTAGE and LOAD meters (control panel)	Monitor output levels during generator set operation. Adjust output as required using VOLTAGE ADJUST rheostat.	Adjustments cannot be made.
14	Before	Engine air filter	a. Inspect air filter for clogging in accordance with para. 3-9.	Filter is clogged.

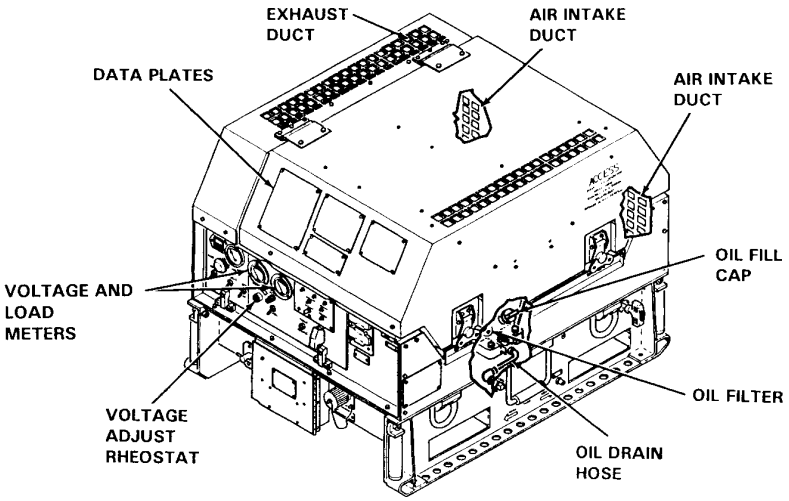

Table 2-1. Operator Preventive Maintenance Checks and Services for MEP 831A / 832A (continued)

Item No.	Interval	Location: Item to Check/ Service	Procedure	Not Fully Mission Capable If:
15	During	FUEL LEVEL meter (located on control panel)	a. Monitor fuel level during generator set operation. **WARNING:** Never service generator set while engine is running. Shut down unit before filling with fuel. Injury to personnel can occur if proper procedures are not followed. b. Replenish fuel as follows: Shut down generator set. Remove fuel fill cap and fill with proper fuel. Install fuel fill cap.	Fuel level is empty or level meter is inoperable.
16	During (After 8 hours of continual use)	Engine oil	**WARNING:** Never service generator set while engine is running. Shut down unit before servicing oil. Injury to personnel can occur if proper procedures are not followed. a. Shut down generator set. Open enclosure cover. b. Remove engine oil fill cap and check oil level. Service as required in accordance with para. 3-1. 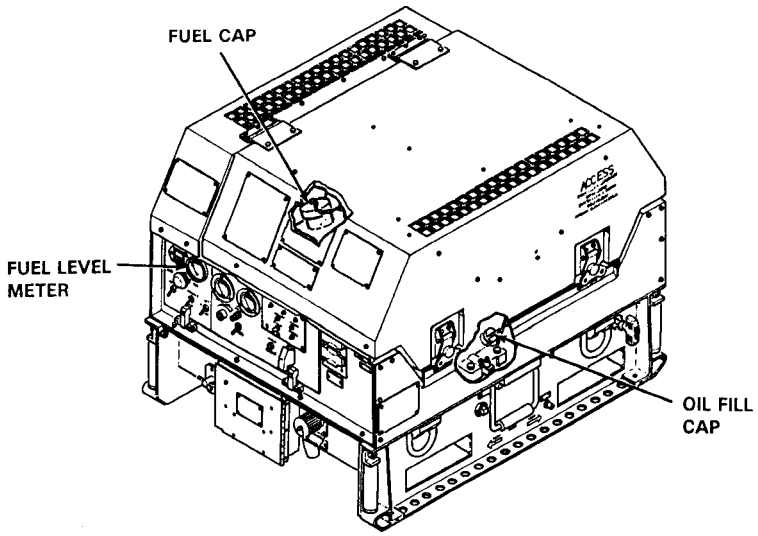	Oil level is at or below minimum oil level mark on dipstick.

Table 2-1. Operator Preventive Maintenance Checks and Services for MEP 831A / 832A (continued)

Item No.	Interval	Location: Item to Check/ Service	Procedure	Not Fully Mission Capable If:
17	During (After 8 hours of continual use)	Fuel filter / water separator	**WARNING:** Never service generator set while engine is running. Shut down unit before draining filter separator. Injury to personnel can occur if proper procedures are not followed. a. Shut down generator set. Open enclosure cover. b. If water is present, drain water from fuel filter / water separator by turning valve.	Water and fuel are mixed. Separator is damaged or leaking.
18	After	Fuel lines	Open enclosure cover. Inspect all fuel lines for cuts, tears, loose connections, or evidence of leakage.	Fuel leaks of any kind are present. Lines are cut, torn, loose, or damaged.
19	After	Overall generator set	a. Inspect for cracks, dents, and corrosion in accordance with para. 3-5. b. Inspect for loose hardware. 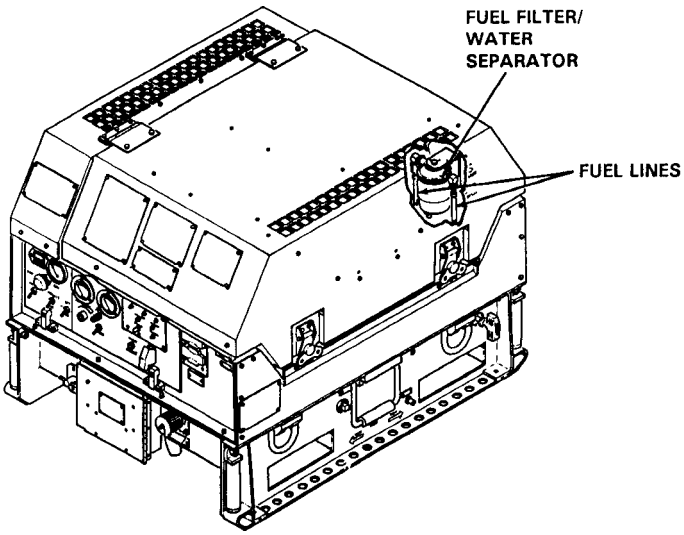 	Significant cracks in enclosure.

Table 2-1. Operator Preventive Maintenance Checks and Services for MEP 831A / 832A (continued)

Item No.	Interval	Location: Item to Check/ Service	Procedure	Not Fully Mission Capable If:
20	After	Data plates	Check for legibility.	
21	After	Engine	a. Inspect engine fuel piping for damage, kinks, or evidence of leakage. b. Inspect hoses for evidence of wear, cracking, or deterioration. Check connections for tightness.	Fuel leaks of any kind are present. Pipes or hoses are damaged.

Section III. OPERATION UNDER USUAL CONDITIONS.

2-6. ASSEMBLY AND PREPARATION FOR USE.

WARNING

Use caution when lifting or moving the generator set to prevent injury to personnel and damage to equipment. Use lifting rings for lifting device and forklift pockets for forklift only. Do not lift object over personnel. Failure to observe this warning can result in personal injury and/or equipment damage.

WARNING

If damaged or defective components are discovered, repair must be performed before operation can begin. Perform required repairs and adjustments before proceeding. Do not operate the generator set with damaged components. Personnel injury can occur if damaged parts are left unfixed. Failure to observe this warning can result in personal injury and/or equipment damage.

NOTE

Prior to placing the generator set into service, operating personnel must be familiar with the location and function of all switches, controls, and indicators. Refer to Paragraph 2-1, Operators Controls and Indicators, and Figure 2-1 before continuing with this procedure.

a. Using a 500 pound capacity hoist or similar lifting device, remove the generator set from its shipping container. Place on a suitable work surface.

b. Remove packing material from generator set.

c. Inspect the generator set for damage incurred during shipping. If the equipment has been damaged, report the damage on the appropriate form as required.

d. Check the generator set against the packing slip to ensure that the shipment is complete. Report all discrepancies in accordance with the instructions of DA PAM 738-750.

e. Check all tags and forms accompanying the generator set for special instructions. Do not remove any forms or tags until the unit is installed and ready for operation. When the unit is installed, remove forms and tags and forward to Quality Control (QC) section office.

WARNING

Never attempt to start the generator set if it is not properly grounded. Failure to observe this warning could result in serious injury or death by electrocution.

f. Connect ground rod and cable as follows:

(1) Open load terminal cover. Insert ground cable (1, Figure 2-2) through slot on generator set GND load terminal (2). Tighten terminal nut using wrench.

(2) Connect coupling (3) to ground rod (4) and screw driving stud (5) into coupling. Make sure that driving stud seats on ground rod.

NOTE

For ease of removal, install ground rod at a 45° angle.

(3) Drive ground rod (4) into ground on a 45° angle until coupling (3) is just above the ground surface.

(4) Remove driving stud (5) and install another section of ground rod (4). Install another coupling (3) and driving stud.

(5) Drive ground rod (4) down until new coupling (3) is just above the ground surface.

(6) Repeat steps (4) and (5) until ground rod has been driven 8 feet or deeper, providing an effective ground.

(7) Connect clamp (6) and ground cable (1) to ground rod (4). Tighten clamp screw securely to prevent movement.

g. If required, drain preservative oil from engine crankcase in accordance with para. 3-1.

h. Fill engine crankcase with oil in accordance with para. 3-1.

i. If battery installation is required, refer to next higher maintenance level. Ensure battery cables are properly connected.

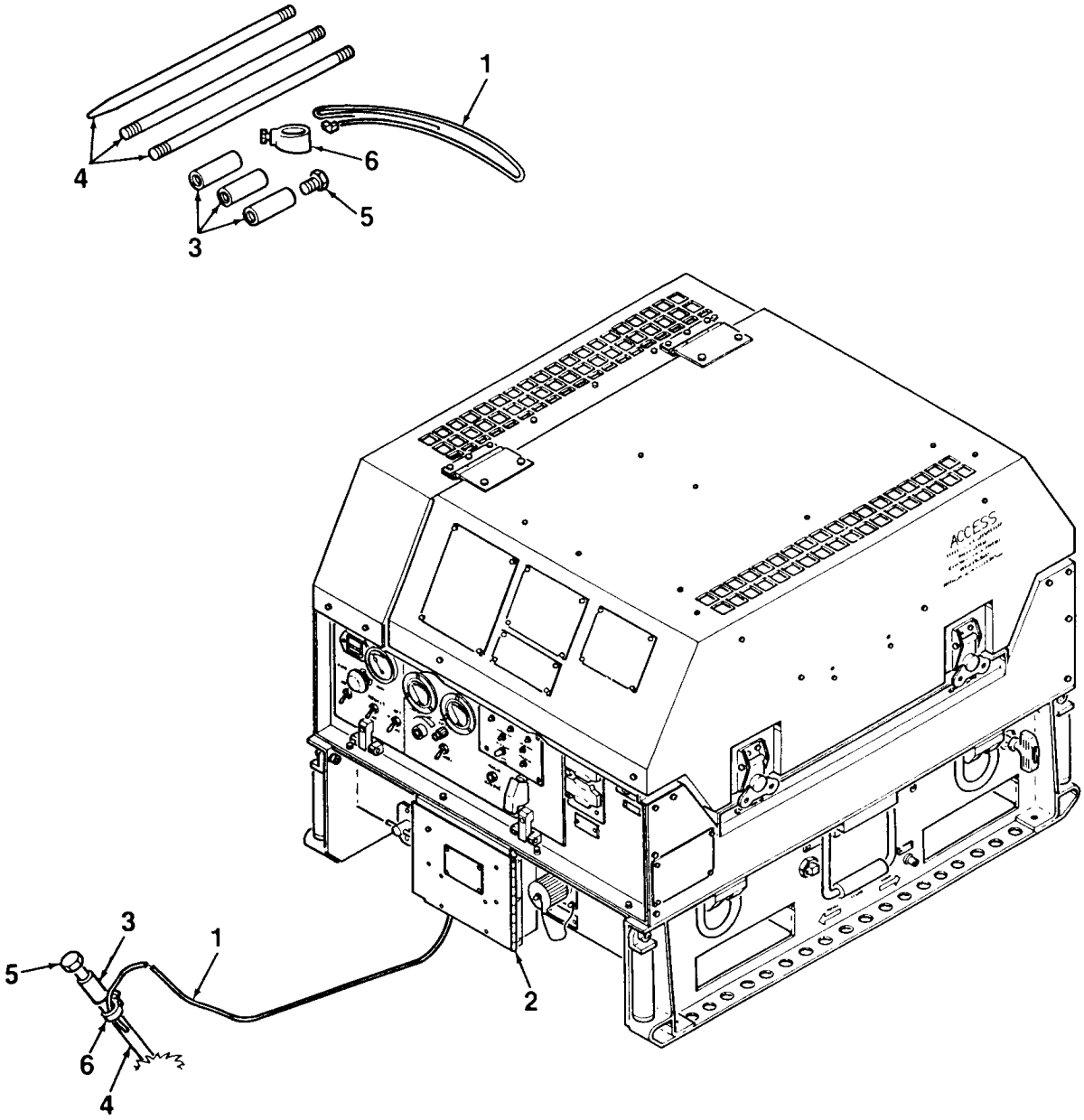

1. Ground Cable
2. GND Load Terminal
3. Coupling
4. Ground Rod
5. Driving Stud
6. Clamp

Figure 2-2. Ground Rod and Cable Installation

WARNING

If battery is not installed, ensure battery cable ends are isolated from each other, and positive cable end is isolated from ground. Mounting posts on generator set enclosure are provided for this purpose. Failure to isolate battery cable ends can result in severe electrical discharge.

j. If auxiliary power is required, connect auxiliary power cable to SLAVE RECEPTACLE (6, Figure 2-3).

NOTE

If auxiliary fuel source is to be used, perform procedure outlined in step l below.

k. Fill fuel tank as follows:

WARNING

Fuel used in this generator set is flammable and toxic to skin, eyes, and respiratory tract. Avoid repeated or prolonged contact. Handle only in well ventilated area. Keep away from sparks, open flames, or other sources of ignition. Do not splash fuel on hot components. Do not fuel generator set while it is operating. Do not over fill the tank. Ensure the unit is properly grounded before fueling. Failure to observe this warning can result in personal injury and equipment damage due to potential fuel ignition and possible explosion. Ensure approved gloves and face shield are worn during handling.

(1) Remove fuel fill cap (31, Figure 2-1) from fuel tank.

(2) Connect a static ground line (provided with the fueling source) between generator set ground stud and fueling source.

(3) Fill fuel tank with up to 4 gallons of recommended fuel.

(4) Remove static ground line and install fuel fill cap (31).

l. If auxiliary fuel source is to be used, connect as follows:

WARNING

Fuel used in this generator set is flammable and toxic to skin, eyes, and respiratory tract. Avoid repeated or prolonged contact. Handle only in well ventilated area. Keep away from sparks, open flames, or other sources of ignition. Do not splash fuel on hot components. Do not fuel generator set while it is operating. Ensure the unit is properly grounded before fueling. Failure to observe this warning can result in personal injury and equipment damage due to potential fuel ignition and possible explosion.

(1) Remove auxiliary fuel cap (32, Figure 2-1) from auxiliary fuel connection.

(2) Connect auxiliary fuel line to auxiliary fuel connection. Ensure proper fuel type is used.

2-7. INITIAL ADJUSTMENTS, DAILY CHECKS, AND SELF TEST.

a. **Initial Adjustments**. No initial adjustments are required for operation of the generator set.

b. **Daily Checks**. Perform all operator PMCS in accordance with Section II.

c. **Self Test**. To check the operational readiness of generator set protection devices and indicators, perform the following procedure:

(1) Ensure DC CIRCUIT BREAKER (9, Figure 2-3) is pushed in.

(2) Place START / RUN/ STOP switch (7) in RUN position.

(3) Depress the FAULT RESET / PUSH TEST button (15) on the fault indicator module and the CIRCUIT INTERRUPTER indicator (12) on the control panel to check indicators. All indicator lights shall illuminate. If CIRCUIT INTERRUPTER indicator does not illuminate, replace bulb. If any malfunction light does not illuminate, refer malfunction to Unit maintenance.

(4) Place START / RUN/ STOP switch (7) in STOP position.

(5) Repeat steps (1) through (3) to verify malfunction was corrected.

2-8. OPERATING PROCEDURES.

WARNING

Make sure that personnel are familiar with the generator set before operating. Follow proper procedures. Failure to observe this warning can result in injury to personnel and damage to equipment.

WARNING

Exhaust discharge contains deadly gases including carbon monoxide. Do not operate generator set in enclosed area unless exhaust discharge is properly vented outside. Position as far away from personnel, shelters, and occupied vehicles as possible. Failure to observe this warning could result in severe personal injury or death due to carbon monoxide poisoning.

FOR ARTIFICIAL RESPIRATION, REFER TO FM 21-11.

THE BEST DEFENSE AGAINST CARBON MONOXIDE POISONING IS GOOD VENTILATION.

WARNING

Shut down the generator set at first sign of failure. Continued operation can result in injury to personnel and will cause damage to equipment. If the generator set is shut down by the activation of a safety device, do not operate again until the cause of the shut down has been determined and eliminated. Failure to observe this warning can result in equipment damage and/or potential personal injury.

WARNING

With any access door open, the noise level of the generator set when operating could cause hearing damage. Hearing protection must be worn when working near the generator set while running.

a. Open load terminal cover to access load and ground terminals (1, 2, Figure 2-3). Connect load cables in accordance with TERMINAL VOLTAGE nameplate mounted on the inside of cover (120/240 volts, 3 wire or 120 volts, 2 wire). Close terminal cover and lock.

WARNING

Ensure voltage selector switch setting matches load cable voltage connections. Mismatch will cause damage to equipment and may result in injury to personnel.

b. Set voltage selector switch to match load cable voltage connections as follows:

(1) Unlock generator set main access cover latches and lift cover to open.

(2) Locate voltage selector switch access door (3) on top of power inverter / converter (4). Open access door and place voltage selector switch in desired position (120/240 volts, 3 wire or 120 volts, 2 wire). Close and lock door.

NOTE

Voltage selector switch access door (3) must be closed securely, or generator set will not produce power.

(3) Close generator set main access cover and lock using latches.

c. If auxiliary fuel source is connected, place the AUX FUEL switch (5) in the ON position.

d. If auxiliary power is required, connect auxiliary power cable to SLAVE RECEPTACLE (6).

WARNING

If battery is not installed, ensure battery cable ends are isolated from each other, and positive cable end is isolated from ground. Mounting posts on generator set enclosure are provided for this purpose. Failure to isolate battery cable ends can result in severe electrical discharge.

e. If ambient temperature is below +20°F (-6.6°C), refer to para. 2-14.

CAUTION

Do not crank engine for more than 15 seconds. Damage to starter motor can occur. Wait 15 seconds before attempting to crank again. If engine does not run after third attempt, refer to Troubleshooting.

f. Ensure DC CIRCUIT BREAKER (9) is pushed in. Place START / RUN / STOP switch (7) in the START position to crank engine. Switch is spring loaded and must be held in place. Release switch to RUN position once engine starts.

g. Adjust generator set voltage as required using the VOLTAGE ADJUST rheostat (10).

h. Place the CIRCUIT INTERRUPTER switch (11) in the CLOSED position. The CIRCUIT INTERRUPTER indicator (12) will illuminate when load is connected.

2-9. GENERATOR SET SHUT DOWN.

a. Place the CIRCUIT INTERRUPTER switch (11, Figure 2-3) in the OPEN position. The CIRCUIT INTERRUPTER indicator (12) will go out when load is disconnected. Allow unit to run in this condition for approximately 3-5 minutes to cool down the engine.

b. Place the START / RUN / STOP switch (7) in the STOP position to shut down generator set.

c. Pull out DC CIRCUIT BREAKER (9).

2-10. EMERGENCY SHUT DOWN.

To stop the generator set under emergency conditions, push the EMERGENCY STOP switch (13, Figure 2-3). Place the START / RUN / STOP switch (7) in the STOP position. The EMERGENCY STOP switch is maintained in the stop position and must be pulled out prior to restarting the generator set.

2-11. OPERATION OF AUXILIARY EQUIPMENT.

No auxiliary equipment exists for the generator set.

2-12. OPERATING INSTRUCTIONS ON DECALS AND INSTRUCTION PLATES.

Refer to Figure 1-5 for operating instruction plates, information/data plates, and warning/caution plates found on the generator set.

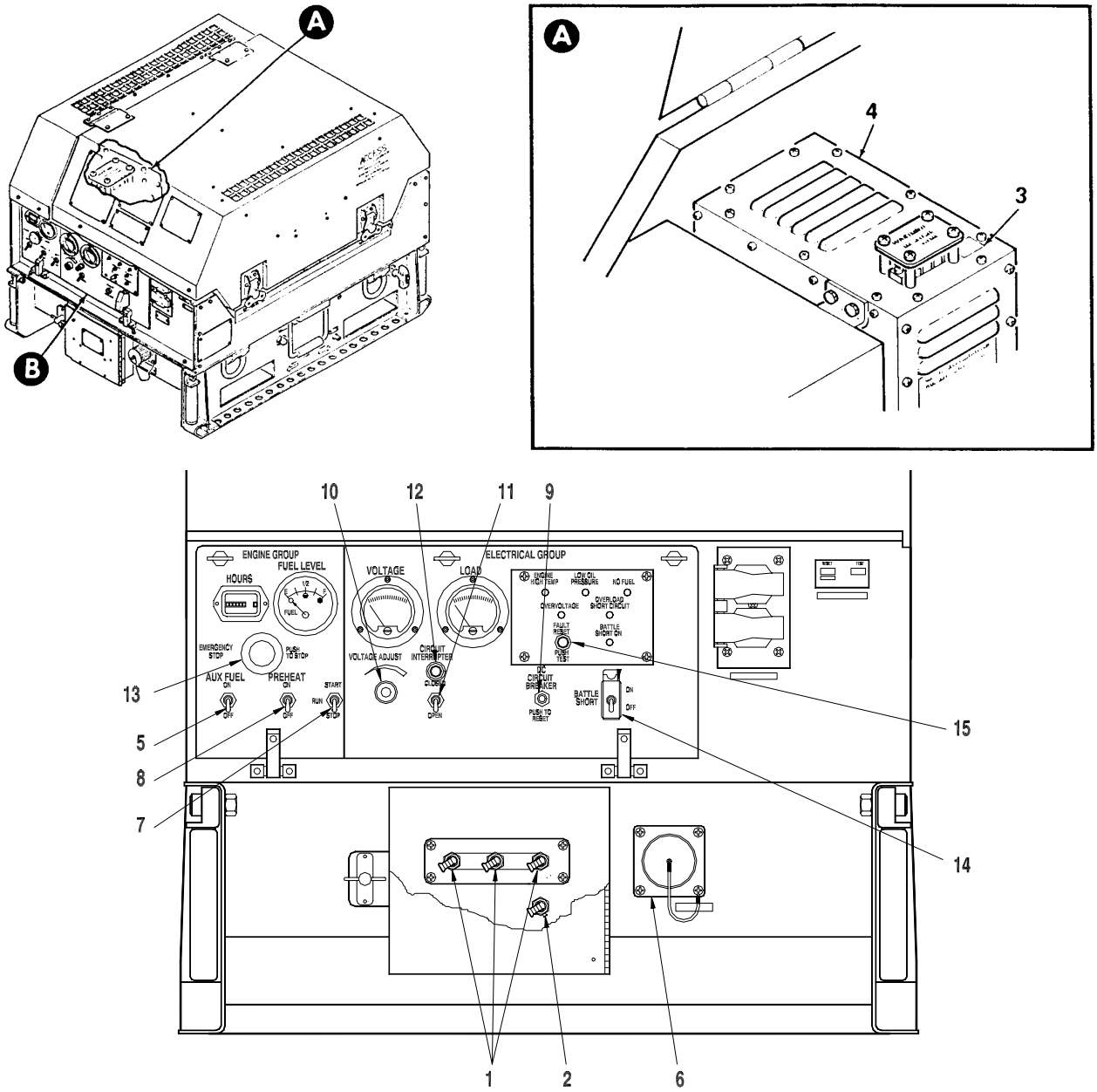

1. Load Terminals
2. Ground Terminal
3. Access Door
4. Power Inverter / Converter
5. AUX FUEL Switch
6. SLAVE RECEPTACLE
7. START / RUN / STOP Switch
8. PREHEAT Switch
9. DC CIRCUIT BREAKER
10. VOLTAGE ADJUST Rheostat
11. CIRCUIT INTERRUPTER Switch
12. CIRCUIT INTERRUPTER Indicator
13. EMERGENCY STOP Switch
14. BATTLE SHORT Switch
15. FAULT RESET / PUSH TEST Switch

Figure 2-3. Operating Procedures

Section IV. OPERATION UNDER UNUSUAL CONDITIONS

2-13. BATTLE SHORT OPERATION.

WARNING

Generator battle short mode is for emergency operation only. Prolonged use under this mode could damage the generator set or pose potential shock hazard to personnel.

a. The generator set is capable of emergency operation under fault conditions. The BATTLE SHORT switch (14, Figure 2-3) allows the set to override anticipated system fault shutdowns in order to maintain operation. The short circuit and overspeed faults cannot be overridden.

b. To operate the set in battle short mode, lift protective cover and place the BATTLE SHORT switch (14) in the ON position while the generator set is running.

2-14. OPERATION IN UNUSUAL WEATHER.

a. The generator set is designed to operate within a temperature range of -25° to +120°F (-32° to +49°C). The set should not be operated in ambient temperatures outside this range.

b. If ambient temperature is below +20°F (-6.6°C), activate engine preheat system as follows:

(1) Place the START / RUN / STOP switch (7, Figure 2-3) in the RUN position.

(2) Place the PREHEAT switch (8) in the ON position. Hold for 10 seconds if temperature is just below +20°F, 20 seconds if temperature is well below +20°F.

(3) Continue to hold the PREHEAT switch (8) in the ON position while cranking engine (step (4)). Release PREHEAT switch once engine has started and reached operating speed.

CAUTION

Do not crank engine for more than 15 seconds. Damage to starter motor can occur. Wait 15 seconds before attempting to crank again. If engine does not run after third attempt, refer to Troubleshooting.

(4) Ensure DC CIRCUIT BREAKER (9) is pushed in. Place START / RUN / STOP switch (7) in the START position to crank engine. Switch is spring loaded and must be held in place. Release switch to RUN position once engine starts.

c. Altitude also plays a role in the performance of the generator set. Refer to the KILOWATT CAPACITY placard (Figure 1-5) for generator load derating.

2-15. NUCLEAR, BIOLOGICAL, AND CHEMICAL (NBC) DECONTAMINATION PROCEDURES.

The generator set is capable of being operated by personnel wearing Nuclear, Biological, or Chemical (NBC) protective clothing without special tools or support equipment. Refer to FM 3-5, NBC Decontamination, for information on decontamination procedures. Specific procedures for the generator set are the following:

a. Control panel indicators sealing gaskets, gaskets at output terminal door, control panel gaskets, rubber tubing within the engine compartment, muffler thermal blanket, coverings for electrical conduits, and fuel drain tubing will absorb and retain chemical agents. Replacement of these items is the recommended method of decontamination.

b. Lubricants, fuel, or battery fluid may be present on the external surfaces of the generator set or components due to leaks or normal operation. These fluids will absorb NBC agents. The preferred method of decontamination is removal of these fluids using conventional decontamination methods in accordance with FM 3-5.

c. Continued decontamination of external generator set surfaces with supertropical bleach (STB) and decontaminating solution number 2 (DS2) will degrade clear plastic indicator coverings to a point where reading indicators will be impossible. This problem will become more evident for soldiers wearing protective masks. The use of STB or DS2 decontaminants in these areas should be minimized. Indicators should be decontaminated with warm, soapy water.

d. External surfaces of the control panel assembly that are marked with painted or stamped lettering will not withstand repeated decontamination with STB or DS2 without degradation of the lettering. The recommended method of decontamination for these areas is warm, soapy water.

e. Areas that will entrap contaminants, making efficient decontamination extremely difficult, include the following: space behind knobs and switches on the control panel, exposed heads on screws, hinged areas of access doors, spaces behind externally mounted equipment specification data plates, areas around external oil drain and fuel drain valves, fuel caps, load output terminal access door, slave receptacle, areas around tie-down / lifting rings, and external screens covering ventilation areas. Replacement of these items, if available, is the preferred method of decontamination. Conventional decontamination methods should be used on these areas, while stressing the importance of thoroughness and the probability of some degree of continuing contact and vapor hazard.

f. In a NBC contamination environment, the generator set should be operated with all access doors closed to reduce the effects of contamination.

g. The use of overhead shelters or chemical protective covers are recommended as an additional means of protection against contamination in accordance with FM 3-5. If using covers, care should be taken to provide adequate space for airflow and exhaust.

h. Refer to FM 3-3 and 3-4 for additional NBC information. All other services will use their applicable directives.

2-16. HAND STARTING (MANUAL ENGINE CRANKING).

a. Place the START / RUN / STOP switch (5, Figure 2-4) in the RUN position.

b. Open the generator set main access cover.

c. Lift actuator lever (1) to the maximum fuel position and press in lock pin (2) on the side of the actuator. Release actuator lever (1). Engine speed will temporarily be controlled by the engine's mechanical governor.

d. Pull out recoil starter handle (3) to the point where you feel strong resistance, then return handle to the starting position.

e. Pull decompression lever (4) down. The lever will return automatically.

f. Pull out recoil starter handle (3) briskly with both hands. Pull hard and fast, all the way out. Engine will start.

g. Place the START / RUN / STOP switch (5) in the START position, then move it back to the RUN position to allow the engine to keep running.

h. Once the engine has started, lift actuator lever (1) to the maximum fuel position (allowing the lock pin to come out). Slowly lower the lever, allowing the electronic governor to take over.

i. Push in DC CIRCUIT BREAKER (7).

NOTE

If the generator set has an operational battery installed it will be necessary to reset the LOW OIL PRESSURE fault on the malfunction indicator module before releasing the lock pin. If fault is not reset the generator set will shutdown.

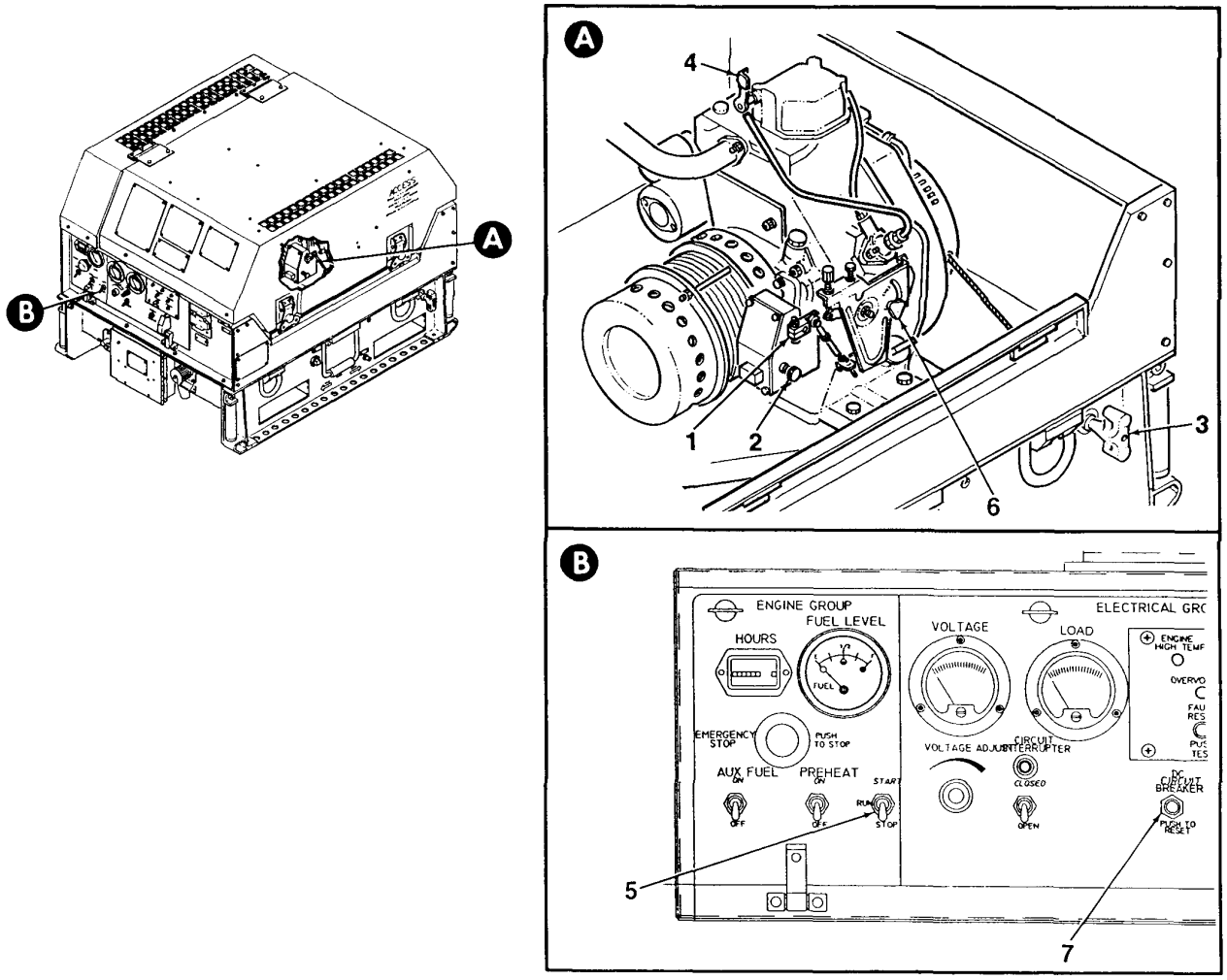

1. Actuator Lever
2. Lock Pin
3. Recoil Starter Handle
4. Decompression Lever
5. START / RUN / STOP Switch
6. Speed Control Knob
7. DC CIRCUIT BREAKER

Figure 2-4. Manual Engine Starting

This page
Intentionally
Left blank

CHAPTER 3
OPERATOR MAINTENANCE INSTRUCTIONS

Section I LUBRICATION INSTRUCTIONS 3-2

3-1 Lubrication Instructions 3-2

Section II OPERATOR TROUBLESHOOTING PROCEDURES 3-3

3-2 General 3-3
3-3 Troubleshooting 3-3

Section III OPERATOR MAINTENANCE INSTRUCTIONS 3-9

3-4 General 3-9
3-5 Generator Set Enclosure and Cover 3-9
3-6 Control Box and Output Panel Assemblies 3-9
3-7 Fuel System 3-10
3-8 Fuel Filter / Water Separator 3-10
3-9 Air Filter 3-11

Section I. LUBRICATION INSTRUCTIONS

3-1. LUBRICATION INSTRUCTIONS.

a. These lubrication instructions are for operator level personnel. Lube intervals (on-condition or hard time) are based on normal operation. Lube more during constant use, and less during inactive periods. Use correct grade of lubricant for seasonal temperature expected.

CAUTION

Always wipe clean oil filler components before starting your lube service. Use correct type or grade of oil. Overfilling will cause spillage and harm engine components.

b. For equipment under manufacturer's warranty, hard time oil service intervals shall be followed. Intervals shall be shortened if lubricants are known to be contaminated or if operation is under adverse conditions (such as longer than usual operating hours, extended idling periods, or extreme dust).

c. Remove engine oil fill cap. Fill engine with required oil until oil level reaches threaded opening of oil fill cap (up to 1.2 quarts (1.1 liters)). Refer to Table 3-1 for recommended oils. Install oil fill cap.

Table 3-1. Lubricant Table for Generator Set MEP 831A / 832A

Lubrication Mil. Symbol Specification	Temperature Range	System Capacity	Interval	Man-hours
MIL-L-46167, OEA	-25°F to +40°F (-31°C to +5°C)	1.2 qts. (1.1 ltrs.)	100 hours	0.25
MIL-L-2104, OE/HDO-15/40	+5°F to +120°F (-15°C to +49°C)	1.2 qts. (1.1 ltrs.)	100 hours	0.25
MIL-L-2104, OE/HDO-10	-15°F to +40°F (-26°C to +5°C)	1.2 qts. (1.1 ltrs.)	100 hours	0.25
MIL-L-2104, OE/HDO-30	+15°F to +90°F (-9°C to +32°C)	1.2 qts. (1.1 ltrs.)	100 hours	0.25
MIL-L-2104, OE/HDO-40	+30°F to +120°F (-1°C to +49°C)	1.2 qts. (1.1 ltrs.)	100 hours	0.25

Section II. OPERATOR TROUBLESHOOTING PROCEDURES

3-2. GENERAL.

This section contains operator troubleshooting for the generator set. Each malfunction or trouble symptom is addressed and is followed by a series of inspections or tests necessary to determine the probable cause and corrective action.

3-3. TROUBLESHOOTING.

a. This chapter does not list all possible malfunctions that may occur, all tests or inspections that may be performed, or all corrective actions for each malfunction. Only those checks and tests authorized for the operator level are covered. If a malfunction is not listed, or is not remedied by corrective actions, notify personnel at a higher maintenance level.

b. If a malfunction or failure occurs during operation or performance check, perform troubleshooting in accordance with Table 3-3. Refer to Table 3-2, Malfunction Index, for determining applicable troubleshooting procedure in Table 3-3.

Table 3-2. Malfunction Index

Trouble	Procedure
Engine will not crank	1
Engine cranks but will not start	2
Engine starts and stops	3
Generator set fails to build up to rated voltage	4
Generator set fails to supply load	5
ENGINE HIGH TEMP indicator illuminates	6
LOW OIL PRESSURE indicator illuminates	7
NO FUEL indicator illuminates	8
Generator set causes radio interference	9
Engine emits white smoke	10
Engine emits black smoke	11
Engine will not start in cold weather	12
No power at convenience receptacle	13

Table 3-3. Operator Level Troubleshooting

MALFUNCTION TEST OR INSPECTION	CORRECTIVE ACTION
1. ENGINE WILL NOT CRANK	
a. Check that START / RUN / STOP switch is in START position.	Place switch in START position.
b. Check if DC CIRCUIT BREAKER is tripped.	Reset by depressing pushbutton.
c. Check malfunction indicator module for system fault light.	Refer to applicable troubleshooting procedure for fault condition.
d. Check battery wires for proper / secure connection. Check that battery is not dead.	Tighten connections.
e. Refer trouble to unit level maintenance.	
2. ENGINE CRANKS BUT WILL NOT START	
a. Check that EMERGENCY STOP switch is not engaged.	Pull out switch to disengage.
b. Check if PREHEAT switch was actuated for cold weather operation.	Place switch in proper position.
c. Check that mechanical governor speed control knob is in START position and tightened.	Adjust control knob and tighten (see item 6, Figure 2-4).
d. Primary fuel mode: check fuel tank level (refer to para. 3-7).	Service fuel tank as required. Press FAULT RESET pushbutton to reset fault indicator module.
e. Auxiliary fuel mode: check that AUX FUEL switch is in ON position.	Place switch in ON position. Press FAULT RESET pushbutton to reset fault indicator module.
f. Inspect for crimped or pinched fuel lines.	Straighten flexible fuel lines. Refer to unit level maintenance if fuel line is damaged.

Table 3-3. Operator Level Troubleshooting (continued)

MALFUNCTION TEST OR INSPECTION	CORRECTIVE ACTION
2. ENGINE CRANKS BUT WILL NOT START (continued)	
g. Check for water in fuel filter / water separator (refer to para. 3-8).	Drain water from filter separator by turning valve.
h. Refer trouble to unit level maintenance.	
3. ENGINE STARTS AND STOPS	
a. Check that electrical connections are properly tightened.	Tighten connections.
b. Inspect for crimped, pinched, or leaking fuel lines.	Straighten flexible fuel lines. Refer to unit level maintenance if fuel line is damaged.
c. Check for water in fuel filter / water separator (refer to para. 3-8).	Drain water from filter separator by turning valve.
d. Refer trouble to unit level maintenance.	
4. GENERATOR SET FAILS TO BUILD UP TO RATED VOLTAGE	
a. Check that GROUND FAULT CIRCUIT INTERRUPTER (GFCI) is not tripped.	Reset GFCI by depressing button.
b. Check that VOLTAGE ADJUST rheostat is properly set.	Adjust rheostat to achieve rated voltage.
c. Check that voltage selector switch access door is fully closed and secured (refer to para. 2-8).	Close and secure access door.
d. Refer trouble to unit level maintenance.	

Table 3-3. Operator Level Troubleshooting (continued)

MALFUNCTION TEST OR INSPECTION	CORRECTIVE ACTION
5. GENERATOR SET FAILS TO SUPPLY POWER TO THE LOAD	
a. Check that CIRCUIT INTERRUPTER switch is not in OPEN position.	Move switch to CLOSED position.
b. Check that GROUND FAULT CIRCUIT INTERRUPTER (GFCI) is not tripped.	Reset GFCI by depressing button.
c. Check that load hook-up is correct.	Match generator voltage output (voltage selector switch position) with load requirement (refer to para. 2-8). Set wiring in accordance with TERMINAL VOLTAGE data plate (Figure 1-5).
d. Refer trouble to unit level maintenance.	
6. ENGINE HIGH TEMP INDICATOR ILLUMINATES	
a. Check air inlet ducts for clogging or obstructions.	Clear restrictions and blockages. Press FAULT RESET pushbutton to reset fault indicator module.
b. Check air inlet grill on recoil starter for clogging or obstructions.	Clear restrictions and blockages. Press FAULT RESET pushbutton to reset fault indicator module.
c. Check air filter for clogging.	Remove filter and inspect (para. 3-9). Replace filter as required.
d. Check if generator set is overloaded.	Reduce load. Press FAULT RESET pushbutton to reset fault indicator module.
e. Refer trouble to unit maintenance level.	

Table 3-3. Operator Level Troubleshooting (continued)

MALFUNCTION TEST OR INSPECTION	CORRECTIVE ACTION
7. LOW OIL PRESSURE INDICATOR ILLUMINATES	
a. Check engine oil level.	Service as required (para. 3-1). Press FAULT RESET pushbutton to reset fault indicator module.
b. Refer trouble to unit level maintenance.	
8. NO FUEL INDICATOR ILLUMINATES	
a. Primary fuel mode: check fuel tank level (refer to para. 3-7).	Service fuel tank as required. Press FAULT RESET pushbutton to reset fault indicator module.
b. Auxiliary fuel mode: check that AUX FUEL switch is in ON position. Check fuel level in auxiliary fuel tank.	Place switch in ON position. Service auxiliary fuel tank as required. Press FAULT RESET pushbutton to reset fault indicator module.
c. Refer trouble to unit level maintenance.	
9. GENERATOR SET CAUSES RADIO INTERFERENCE	
a. Check that load terminals and cables are connected tightly.	Tighten connections using load wrench supplied.
b. Check that ground wire is connected tightly.	Tighten connection using load wrench supplied.
c. Check that ground rod is properly installed and operational.	Replace ground rod.
d. Refer trouble to unit maintenance level.	

Table 3-3. Operator Level Troubleshooting (continued)

MALFUNCTION TEST OR INSPECTION	CORRECTIVE ACTION
10. ENGINE EMITS WHITE SMOKE	
a. Check engine oil level to see if it is too high.	Refer trouble to unit maintenance level to drain and service engine oil.
b. Check for water in fuel filter / water separator (refer to para. 3-8).	Drain water from filter separator by turning valve.
c. Has engine run for prolonged periods at idle speed (no load)?	Operate engine at rated load only.
d. Refer trouble to unit level maintenance.	
11. ENGINE EMITS BLACK SMOKE	
a. Check air filter for clogging or dirt.	Remove filter and inspect (para. 3-9). Replace filter as required.
b. Refer trouble to unit maintenance level.	
12. ENGINE WILL NOT START IN COLD WEATHER	
a. Check that PREHEAT switch is in ON position.	Place switch in ON position.
b. Check that proper fuel is being used for cold weather operation.	Use proper fuel as noted on FUEL CAPACITY data plate (Figure 1-5).
c. Check for crimped or pinched fuel lines. Check for clogs or frozen water in fuel lines, filter separator.	Straighten flexible fuel lines. Refer to unit level maintenance if fuel line or filter separator is frozen or damaged.
d. Refer trouble to unit level maintenance.	

Table 3-3. Operator Level Troubleshooting (continued)

MALFUNCTION TEST OR INSPECTION	CORRECTIVE ACTION
13. NO POWER AT CONVENIENCE RECEPTACLE	
a. Check that GROUND FAULT CIRCUIT INTERRUPTER (GFCI) is not tripped.	Reset GFCI by depressing button.
b. Refer trouble to unit level maintenance.	

Section III. OPERATOR MAINTENANCE PROCEDURES

3-4. GENERAL.

This section contains information on the generator set maintenance tasks that are the responsibility of the operator. If a procedure is not located in this chapter, you are not authorized to perform it.

WARNING

Never service, inspect, or perform maintenance on the generator set while the engine is running. Always shut down the unit before servicing. Allow engine to cool before handling components. Failure to observe this warning can result in severe burn or injury.

3-5. GENERATOR SET ENCLOSURE AND COVER.

a. Inspect the enclosure assembly for missing or loose components, cracks, dents, or other damage.

b. Check cover latches to ensure that they are properly secured. Check for proper operation, free of binding. Ensure that latches lock cover securely.

c. Open enclosure cover. Check that pistons hold cover in place. Inspect cover insulating material for damage and security of attachment. Close enclosure cover and lock using latches.

d. If damage is found, notify unit level maintenance personnel for repair.

3-6. CONTROL BOX AND OUTPUT PANEL ASSEMBLIES.

a. Inspect control panel switches for ease of operation. Ensure that switches spring back to position.

b. Clean hour, fuel level, voltage, and frequencies meters with a clean dry cloth. Inspect meters for broken glass or improper indication.

c. Conduct fault module indicator self test by depressing the FAULT RESET / PUSH TEST pushbutton. All indicator lights should illuminate.

d. Open control panel. Check rear of controls and indicators for obvious damage and evidence of electrical short. Inspect sealing gasket for cuts, tears, and security of attachment. Close control panel.

e. Inspect convenience receptacle cover for security of attachment. Inspect slave receptacle for damage. Make sure that cover is securely attached.

f. Inspect load and ground terminals for cracks, missing surge arrestors, or other obvious damage.

g. If damage is found, notify unit level maintenance personnel for repair.

3-7. FUEL SYSTEM.

a. Open enclosure cover and inspect inside of enclosure for evidence of fuel leakage. Inspect fuel tank for signs of damage. Check that tank is securely attached to skid base.

b. Inspect fuel hoses for cuts, tears, or evidence of deterioration. Check that hoses are securely fastened to fittings.

c. Close enclosure cover and lock using latches.

d. Inspect fuel tank fill cap and auxiliary fuel connection cap for security of attachment.

e. Remove fuel tank fill cap from filler neck. Remove fuel strainer and inspect for collected contaminants. Clean strainer and install. Install fuel tank fill cap and tighten.

f. If damage is found, notify unit level maintenance personnel for repair.

3-8. FUEL FILTER / WATER SEPARATOR.

a. Open enclosure cover to gain access to fuel filter / water separator.

b. Inspect filter / separator drain valve for damage or evidence of leakage. If leak or damage is found, notify unit level maintenance personnel for repair.

c. Inspect filter / separator bowl for trapped water. Drain water by turning valve. After water is drained, close valve.

d. Close enclosure cover and lock using latches.

3-9. AIR FILTER.

a. Unlock main access cover latches and lift cover to open.

b. Remove cover (1, Figure 3-1) from air filter housing (2) by removing wing nut (3) and washer (4). Remove filter (5) from housing (2).

c. Install new filter (5) into housing (2). Install cover (1) onto housing using wing nut (3) and washer (4).

d. Close main access cover and lock in place using latches.

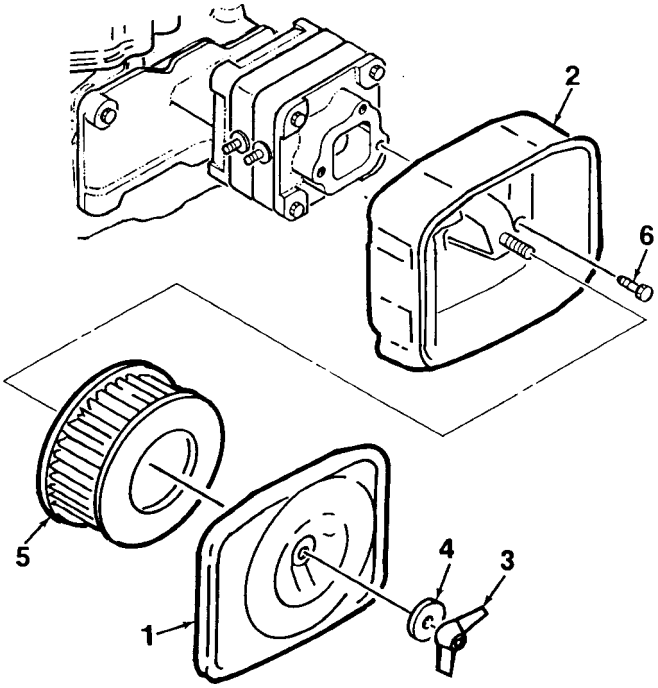

Figure 3-1. Air Filter Replacement

This page
Intentionally
Left blank

CHAPTER 4
UNIT MAINTENANCE INSTRUCTIONS

Section I LUBRICATION INSTRUCTIONS 4-3

4-1 General 4-3

Section II REPAIR PARTS; TOOLS; SPECIAL TOOLS; TEST, MEASUREMENT, AND DIAGNOSTIC EQUIPMENT (TMDE); AND SUPPORT EQUIPMENT 4-6

4-2 Common Tools and Equipment 4-6
4-3 Special Tools, TMDE, and Support Equipment 4-6
4-4 Repair Parts 4-6

Section III SERVICE UPON RECEIPT OF EQUIPMENT 4-6

4-5 General 4-6

Section IV UNIT PREVENTIVE MAINTENANCE CHECKS AND SERVICES (PMCS) 4-7

4-6 General 4-7
4-7 PMCS Procedures 4-7
4-8 Cleaning Agents 4-8

Section V UNIT LEVEL TROUBLESHOOTING PROCEDURES 4-12

4-9 General 4-12
4-10 Troubleshooting 4-12

Section VI UNIT MAINTENANCE PROCEDURES 4-27

4-11 Generator Set Maintenance 4-27
4-12 Control Box Assembly Maintenance 4-28
4-13 Control Panel Assembly Maintenance 4-32
4-14 HOURS Meter Maintenance 4-34
4-15 FUEL LEVEL Gauge Maintenance 4-35
4-16 VOLTAGE Meter Maintenance 4-36
4-17 LOAD Meter Maintenance 4-37
4-18 Fault Indicator Module Maintenance 4-38
4-19 Operator Switch Maintenance 4-39
4-20 EMERGENCY STOP Switch Maintenance 4-41
4-21 DC CIRCUIT BREAKER Maintenance 4-43

Section VI UNIT MAINTENANCE PROCEDURES (continued)

4-22 CIRCUIT INTERRUPTER Indicator Light Maintenance 4-44
4-23 VOLTAGE ADJUST Rheostat Maintenance 4-46
4-24 Control Box Relay Maintenance 4-48
4-25 Control Box Fuse, Diode, and Terminal Block Maintenance 4-50
4-26 Governor Control Maintenance 4-52
4-27 Control Box Wiring Harness Maintenance 4-54
4-28 AC Circuit Interrupter Contactor Maintenance 4-56
4-29 Battery Charging Regulator Maintenance 4-58
4-30 Convenience Receptacle Maintenance (60 Hz, MEP 831A only) 4-60
4-31 Ground Fault Circuit Interrupter Maintenance (60 Hz, MEP 831A only) 4-62
4-32 SLAVE RECEPTACLE Maintenance 4-64
4-33 Output Terminals and EMI Filter Maintenance 4-66
4-34 Voltage Resistor Maintenance 4-70
4-35 Lifting Handle Maintenance 4-72
4-36 Engine Oil Drain Assembly Maintenance 4-74
4-37 Engine Temperature Switch Maintenance 4-76
4-38 Lubrication Oil Pressure Switch Maintenance 4-78
4-39 Fuel Level Switch Assembly Maintenance 4-80
4-40 Fuel Sender Maintenance 4-82
4-41 Fuel Pickup Tube Assembly Maintenance 4-84
4-42 Primary Fuel Pump Maintenance 4-85
4-43 Muffler Assembly Maintenance 4-88
4-44 Battery Maintenance 4-92
4-45 Battery Cable Assembly Maintenance 4-96
4-46 Main Access Cover Maintenance 4-100
4-47 Enclosure Panel Maintenance 4-108
4-48 Cooling Fan and Temperature Switch Maintenance 4-112
4-49 Fuel Filter / Water Separator Maintenance 4-120
4-50 Fuel Fill Cap and Fill Pocket Maintenance 4-123
4-51 Auxiliary Fuel Pump Maintenance 4-126
4-52 Power Inverter / Converter Maintenance 4-128
4-53 DC Magnetic Contactor Maintenance 4-132
4-54 Governor Actuator Maintenance 4-135

Section VII PREPARATION FOR SHIPMENT AND STORAGE 4-141

4-55 General 4-141
4-56 Administrative Storage 4-141
4-57 Short Term Storage (30 days or less) 4-141
4-58 Intermediate Term Storage (more than 30 days) 4-141
4-59 Shipment 4-141

Section I. LUBRICATION INSTRUCTIONS

4-1. GENERAL.

a. These lubrication instructions are for unit level maintenance personnel. Lube intervals (on-condition or hard time) are based on normal operation. Lube more during constant use, and less during inactive periods. Use correct grade of lubricant for seasonal temperature expected.

CAUTION

Always wipe clean oil filler components before starting your lube service. Use correct type or grade of oil. Overfilling will cause spillage and harm engine components.

b. The engine oil filter shall be changed as applicable when:

(1) It is known to be contaminated or clogged.

(2) The prescribed hard time interval has arrived.

c. This generator set is not enrolled in the Army Oil Analysis Program (AOAP). Hard time service intervals apply.

d. For equipment under manufacturer's warranty, hard time oil service intervals shall be followed. Intervals shall be shortened if lubricants are known to be contaminated or if operation is under adverse conditions (such as longer than usual operating hours, extended idling periods, or extreme dust).

Table 4-1. Lubricant Table for Generator Set MEP 831A / 832A

Lubrication Mil. Symbol Specification	Temperature Range	System Capacity	Interval	Man-hours
MIL-L-46167, OEA	-25°F to +40°F (-31°C to +5°C)	1.2 qts. (1.1 ltrs.)	100 hours	0.25
MIL-L-2104, OE/HDO-15/40	+5°F to +120°F (-15°C to +49°C)	1.2 qts. (1.1 ltrs.)	100 hours	0.25
MIL-L-2104, OE/HDO-10	-15°F to +40°F (-26°C to +5°C)	1.2 qts. (1.1 ltrs.)	100 hours	0.25
MIL-L-2104, OE/HDO-30	+15°F to +90°F (-9°C to +32°C)	1.2 qts. (1.1 ltrs.)	100 hours	0.25
MIL-L-2104, OE/HDO-40	+30°F to +120°F (-1°C to +49°C)	1.2 qts. (1.1 ltrs.)	100 hours	0.25

e. Drain and service engine oil and filter as follows:

(1) Unlock main access cover latches and lift cover to open.

(2) Place oil catch pan under oil drain plug (1, Figure 4-1).

(3) Remove engine oil fill cap (2) to vent engine crankcase while draining.

(4) Remove oil drain plug (1). Move oil drain valve (7) to the OPEN position and drain oil from crankcase.

(5) Once oil is drained, replace drain plug (1) and move valve (7) to CLOSE position. Remove oil catch pan. Dispose of oil In accordance with local ordinance.

(6) Remove oil filter (3) from crankcase cover (4) by removing bolt (5). Remove and discard O-ring (6).

(7) Inspect oil filter (3) for obvious damage. Check filter's mesh material for damage. Clean out clogging dirt and residue. Replace as required and dispose of in accordance with local ordinance.

(8) Inspect area around oil filter port for evidence of leakage. Clean area of dirt and accumulated grime using a clean rag.

(9) Apply a light coat of lubricating oil to new O-ring (6) and install into oil filter port.

CAUTION

Do not overtighten bolt (5). Damage to filter will occur.

(10) Slide oil filter (3) into crankcase cover (2) and secure using bolt (5).

(11) Fill engine with required oil until level reaches threaded opening of oil fill cap (2) (up to 1.2 quarts (1.1 liters)). Refer to Table 4-1 for recommended oils.

(12) Install oil fill cap (2).

(13) Close main access cover and secure using latches.

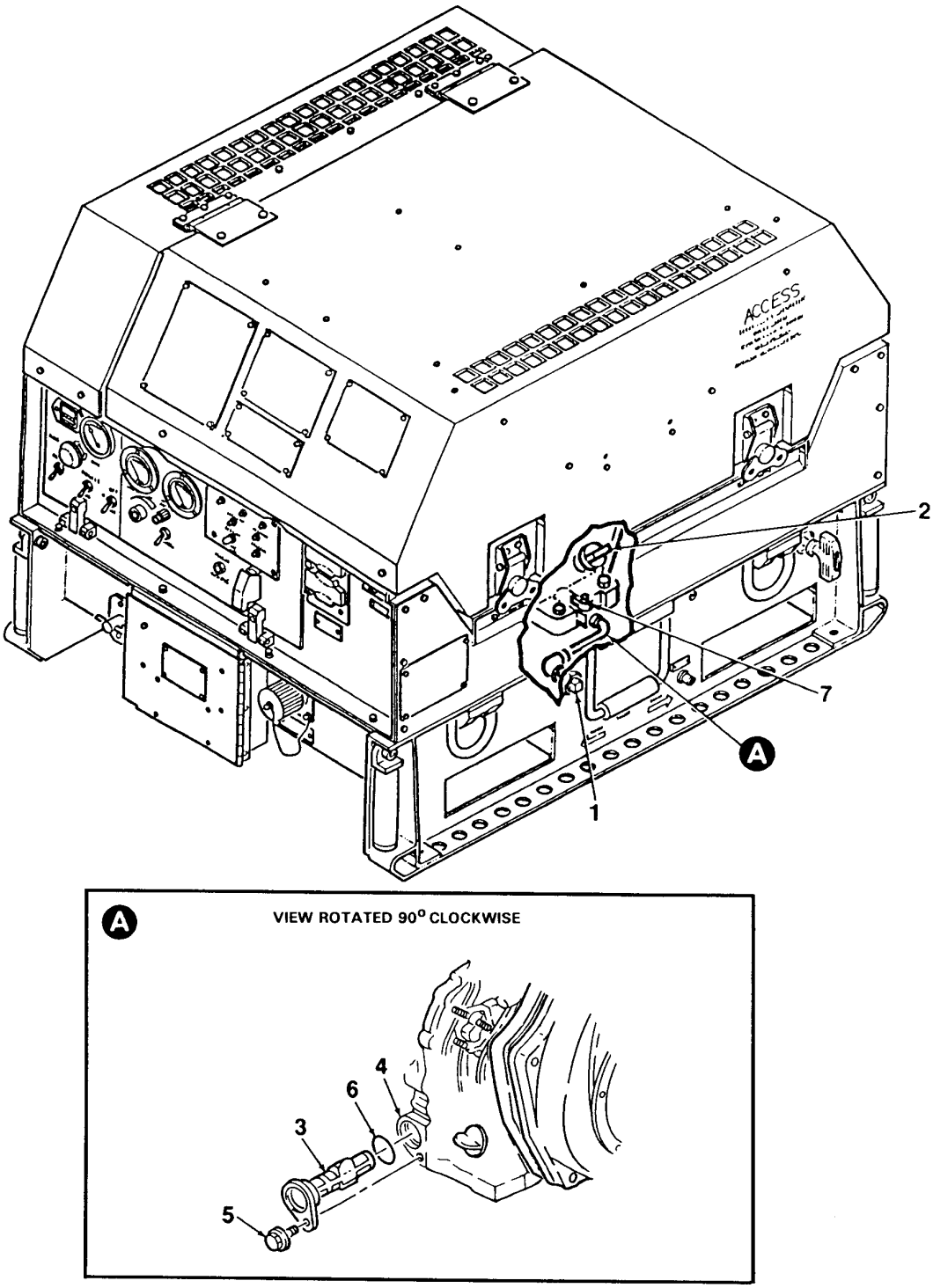

1. Oil Drain Plug
2. Oil Fill Cap
3. Oil Filter
4. Crankcase Cover
5. Bolt
6. O-Ring
7. Oil Drain Valve

Figure 4-1. Engine Oil Servicing

Section II. REPAIR PARTS; TOOLS; SPECIAL TOOLS; TEST, MEASUREMENT, AND DIAGNOSTIC EQUIPMENT (TMDE); AND SUPPORT EQUIPMENT

4-2. COMMON TOOLS AND EQUIPMENT.

a. For authorized common tools and equipment, refer to the Modified Table of Organization and Equipment (MTOE), CTA 50-970, or CTA 8-100, as applicable to your unit.

b. Tool Kit, General Mechanics; Automotive, Supply Catalog SC5180-90-CL-N26, is the primary supply source for tools used in maintenance of the generator set.

4-3. SPECIAL TOOLS, TMDE, AND SUPPORT EQUIPMENT.

Refer to TM 9-6115-639-23P, Generator Set Repair Parts and Special Tools List, for complete data on special tools and equipment required for generator set maintenance. Refer to the Maintenance Allocation Chart (MAC), Appendix B, for special tools and equipment used at the unit maintenance level.

4-4. REPAIR PARTS.

a. Refer to Appendix H for a list of Mandatory Replacement Parts required for unit level maintenance of the generator set.

b. Repair parts are listed and illustrated in TM 9-6115-639-23P, Generator Set Repair Parts and Special Tools List.

Section III. SERVICE UPON RECEIPT OF EQUIPMENT

4-5. GENERAL.

Refer to paragraph 2-6 for instructions on unpacking, assembly, and servicing of generator set components.

Section IV. UNIT PREVENTIVE MAINTENANCE CHECKS AND SERVICES (PMCS)

4-6. GENERAL.

Unit Preventive Maintenance Checks and Services (PMCS) means systematic caring, inspecting, and servicing of equipment to keep it in good condition and to prevent breakdowns to ensure that the generator set is ready for operation at all times. It must be inspected so that defects can be discovered and corrected before they result in damage or failure. This section lists PMCS required for the generator set and authorized for the unit maintenance level.

a. Be sure to perform your PMCS in the same order, so it gets to be a habit. Once you have had some practice, you will quickly spot anything wrong.

b. Pay attention to WARNINGS, CAUTIONS, and NOTES.

c. Perform PMCS tasks at the intervals noted in Table 4-2. Do not skip PMCS intervals.

d. Use DA Form 2404 (Equipment Inspection and Maintenance Worksheet) to record any faults you discover, unless you can fix them. You DO NOT need to record faults that you fix.

4-7. PMCS PROCEDURES.

Your Preventive Maintenance Checks and Services, Table 4-2, lists inspections and care required to keep your generator set in good operating condition. It is set up so you can make your BEFORE (B) OPERATION checks as you walk around the generator set.

a. **Item No. Column.** The Item No. column in Table 4-2 lists each check / service in chronological order.

b. **Interval Column.** The Interval column tells you when to do a certain check or service. Intervals are based on operating hours, unless otherwise noted.

c. **Location Column.** The Location: Item to Check / Service column directs maintenance personnel to the general area on the generator set where the check or service is to be performed.

d. **Procedure Column.** The Procedure column of Table 4-2 tells you how to do required checks and services. Tolerances, adjustment limits, and instrument readings are included as applicable. When replacement or repair of a component is required, the procedures column will direct you to the appropriate task.

NOTE

Terms “ready/available” and “mission capable” refer to same status: Equipment is on hand and ready to perform its combat missions. (See DA Pam 738-750).

e. **Not Fully Mission Capable If Column.** The Not Fully Mission Capable If column in Table 4-2 tells you when your generator set is non-mission capable and why the engine assembly cannot be used.

If the generator set does not perform as required, refer to Section V, Troubleshooting.

If anything looks wrong and you cannot fix it, write it on your DA Form 2404. IMMEDIATELY report it to your supervisor.

When you perform PMCS you will always need a rag or two. Following are checks that are common to the entire generator set:

(1) Keep It Clean. Dirt, grease, oil, and debris only get in the way and may cover up a serious problem. Clean as you work and as needed. Use dry cleaning solvent on all metal surfaces. Use soap and water when you clean rubber or plastic material.

(2) Rust and Corrosion. Check components for rust and corrosion. If any bare metal or corrosion exists, clean, and apply a thin coat of oil. Report it to your supervisor.

(3) Bolts, Nuts, and Screws. Check them for obvious looseness, missing, bent, or broken condition. You cannot check them all with a tool, but look for chipped paint, bare metal, or rust around bolt heads. If you find a bolt, nut, or screw you think is loose, tighten it or report it to your supervisor.

(4) Welds. Look for loose or chipped paint, rust, or gaps where parts are welded together. If you find a bad weld, report it to your supervisor.

(5) Electric Wires and Connectors. Look for cracked, frayed, or broken insulation, bare wires, and loose or broken connectors. Tighten loose connectors. Report any damaged wires to your supervisor.

(6) Hoses and Fluid Lines. Look for wear, damage, and leaks, and make sure clamps and fittings are tight. Wet spots show leaks, but a stain around a fitting or connector can also mean a leak. If a leak comes from a loose fitting or connector, tighten it. If something is broken or worn out, report it to your supervisor.

4-8. CLEANING AGENTS.

WARNING

Cleaning solvents are flammable and toxic to eyes, skin, and respiratory tract. Skin and eye protections are required when working in contact with cleaning solvents. Avoid prolonged or repeated contact. Work in well ventilated area only. Keep away from heat, sparks, and open flame. Do not smoke while using cleaning solvent. Failure to observe this warning can result in injury or death to personnel

CAUTION

When cleaning inside of enclosure, engine must be COLD (same temperature as outside air). DO NOT point water stream directly at any electrical connection. DO NOT use high pressure water supply system. Damage to engine, electrical system, and other components may result.

NOTE

Only use those authorized cleaning solvents or agents listed in Appendix E, Expendable and Durable Items List.

a. When using water to clean the generator set enclosure, always cover all air ducts and exhaust ports using waterproof material to prevent damage to components. Cover control box and output panel components. Use water pressure and volume similar to a standard household water supply (50 PSI, maximum, 3 gallons per minute).

b. After cleaning, allow generator set to air dry. Do not use compressed air to dry unit. Do not run engine to decrease drying time.

c. Remove all component covers before starting the generator set.

CAUTION

Keep cleaning solvents, gasoline, and lubricants away from rubber or soft plastic parts. Solvents will deteriorate these materials.

d. When cleaning grease build-up or rusty places, use cleaning solvent (Item 7, App. E), then apply a thin coat of light oil (Item 6, App. E) to affected area.

Table 4-2. Unit Level Preventive Maintenance Checks and Services for MEP 831A / 832A

Item No.	Interval	Location: Item to Check/ Service	Procedure	Not Fully Mission Capable If:
1	100 hours	Engine lubricating oil system	**NOTE:** First service occurs after 25 hours of engine operation. Follow 100 hours intervals thereafter. Service engine lubricating oil and clean filter. Refer to Lubrication Instructions (Para. 4-1).	Engine oil has not been changed or filter has not been cleaned.
2	100 hours	Engine air filter	a. Open enclosure cover to gain access to engine air filter case. b. Remove air filter (Para. 3-9). c. Inspect air filter for dirt, clogging, or obstruction. Replace as required. d. Install air filter (Para. 3-9). e. Close enclosure cover and lock using latches.	Air filter is clogged, dirty, or damaged.
3	100 hours	Battery electrolyte level	Check battery electrolyte and gravity level (wet cell battery only). Service as required (Para. 4-44).	Battery electrolyte level is low.
4	300 hours	Fuel filter / water separator	Remove and replace filter / separator element (Para. 4-49).	Filter / separator element has not been replaced.
5	300 hours	Electrical system	Inspect electrical receptacles for damage, corrosion, or evidence of electrical short. Check for bent, broken, or missing pins. Clean deposits from receptacles.	Receptacles are damaged or burned.

Table 4-2. Unit Level Preventive Maintenance Checks and Services for MEP 831A / 832A (continued)

Item No.	Interval	Location: Item to Check/ Service	Procedure	Not Fully Mission Capable If:
6	500 hours	Engine air filter	Remove and replace engine air filter (Para. 3-9).	Engine air filter has not been replaced.
7	500 hours	Engine fuel injection pump	a. Inspect fuel injection pump for damage and evidence of leakage. Check area around pump sealing gasket for leaks. b. Refer to TM 9-2815-257-24 for pump and gasket replacement.	Fuel injection pump is damaged or leaking. Pump sealing gasket leaking.
8	500 hours	Engine valves	Adjust engine valve clearance in accordance with TM 9-2815-257-24.	Engine valves are not properly adjusted, causing improper engine operation.
9	1000 hours	Engine fuel injector nozzle	Remove and replace fuel injector nozzle in accordance with TM 9-2815-257-24.	Fuel injector nozzle has not been replaced.

Section V. UNIT LEVEL TROUBLESHOOTING PROCEDURES

4-9. GENERAL.

This section contains unit level troubleshooting and tests for the generator set. Each malfunction or trouble symptom is addressed and is followed by a series of inspections or tests necessary to determine the probable cause and corrective action.

4-10. TROUBLESHOOTING.

a. This chapter does not list all possible malfunctions that may occur, all tests or inspections that may be performed, or all corrective actions for each malfunction. Only those checks and tests authorized for the unit level are covered. If a malfunction is not listed, or is not remedied by corrective actions, notify personnel at a higher maintenance level.

b. Prior to using troubleshooting table, be sure you have performed all normal operational checks. Refer to the system electrical schematic (Figure FO-1), system wiring diagram (Figure FO-2), generator set wiring harness diagrams (Figures FO-3 and FO-4), control panel wiring harness diagrams (Figures FO-5 and FO-6), and Diagnostic Test Points (Figure 4-2) for assistance in troubleshooting electrical components. Conduct continuity checks on suspect wiring / harnesses as required utilizing these schematics and diagrams.

c. These troubleshooting procedures assume that electrical wires are undamaged and wiring harnesses are operable. Conduct continuity checks on suspect wiring / harnesses as required prior to performing troubleshooting procedures in Table 4-4.

d. Refer to Table 4-3, Malfunction Index, for determining applicable troubleshooting procedure located in Table 4-4.

Table 4-3. Malfunction Index

Trouble	Procedure
Engine will not crank	1
Engine cranks but will not start	2
Engine cranks slowly, battery runs down prior to starting	3
Engine starts and stops	4
Engine will not start in cold weather	5
Engine will not stop when EMERGENCY STOP switch is pressed	6
Engine starts, no generator voltage reading	7
Generator set fails to supply power to the load	8
No kW reading when load is applied	9
No power at convenience receptacle	10
Generator set causes radio interference	11
Circuit interrupter will not close	12
Circuit interrupter will not remain closed when CIRCUIT INTERRUPTER switch released	13
Auxiliary fuel system will not energize	14
BATTLE SHORT indicator will not illuminate when BATTLE SHORT switch in ON	15

Table 4-3. Malfunction Index (continued)

Fan (B2) does not operate at high temperature	16
Fan (B3) does not operate at high temperature	17
Engine emits white smoke	18
Engine emit black smoke	19
Malfunction indicators do not illuminate when PUSH TEST switch is pressed	20
ENGINE HIGH TEMP indicator illuminates	21
LOW OIL PRESSURE indicator illuminates	22
NO FUEL indicator illuminates	23

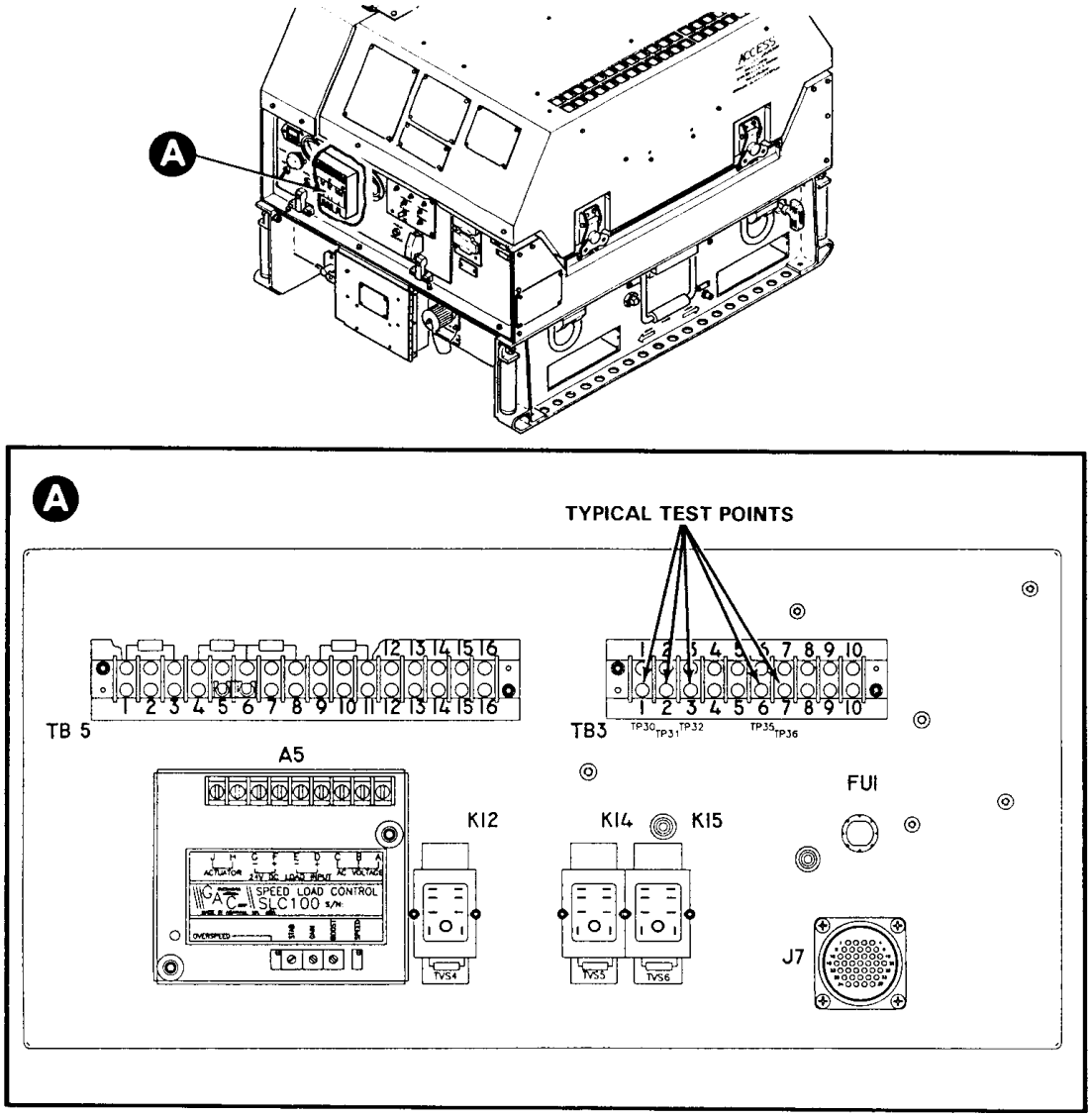

Figure 4-2. Diagnostic Test Points

Table 4-4. Unit Level Troubleshooting

MALFUNCTION TEST OR INSPECTION	CORRECTIVE ACTION
1. ENGINE WILL NOT CRANK	
a. Check battery for loose connections, corrosion, damaged cable.	Clean battery terminals and tighten connections.
b. Check battery voltage as follows: (1) Connect positive (+) probe of multimeter to terminal board TB3, test point TP30. (2) Connect negative (-) probe to TB3, test point TP31. (3) Place START / RUN / STOP switch in START position. (4) 20 to 32 VDC present?	If not present, service battery (Para. 4-44). Replace as required.
c. Check START / RUN / STOP switch as follows: (1) Connect positive (+) probe of multimeter to terminal board TB5, pin 11. (2) Connect negative (-) probe to TB3, test point TP31. (3) Place START / RUN / STOP switch in START position. (4) 20 to 32 VDC present?	If not present, remove and replace START / RUN / STOP switch (Para. 4-19).
d. Check diode CR1 as follows: (1) Connect positive (+) probe of multimeter to terminal board TB5, pin 9. (2) Connect negative (-) probe to TB3, test point TP31. (3) Place START / RUN / STOP switch in START position. (4) 20 to 32 VDC present?	If not present, remove and replace diode (Para. 4-25).
e. Check relay K15 as follows: (1) Place START / RUN / STOP switch in STOP position. (2) Zero ohms at relay K15?	If not zero ohms, remove and replace relay (Para. 4-24).
f. Check engine start contactor K2: (1) Connect positive (+) probe of multimeter to K2-A2. (2) Connect negative (-) probe to TP31. (3) Continuity?	If not, remove and replace engine start contactor (Para. 4-28).
g. Remove and replace engine starter motor in accordance with TM 9-2815-257-24.	
h. Refer trouble to direct support level maintenance.	

Table 4-4. Unit Level Troubleshooting (continued)

MALFUNCTION TEST OR INSPECTION	CORRECTIVE ACTION
2. ENGINE CRANKS BUT WILL NOT START	
a. Check for clogged fuel filter / water separator element.	Remove and replace filter / separator element (Para. 4-49).
b. Check that fuel pump assembly is operating when START / RUN / STOP switch is placed in RUN position (audible sound).	Remove and replace fuel pump assembly (Para. 4-42).
c. Check diode CR2 as follows: (1) Connect positive (+) probe of multimeter to terminal board TB3, test point TP32. (2) Connect negative (-) probe to TB3, test point TP31. (3) Place START / RUN / STOP switch in START position. (4) 20 to 32 VDC present?	If not present, remove and replace diode (Para. 4-25).
d. Check fault lockout relay K12 as follows: (1) Connect positive (+) probe of multimeter to K12-9. (2) Connect negative (-) probe to terminal board TB3, test point TP31. (3) Place START / RUN / STOP switch in START position. (4) 20 to 32 VDC present?	If not present, remove and replace relay (Para. 4-24).
e. Check EMERGENCY STOP switch as follows: (1) Connect positive (+) probe of multimeter to S19-A2. (2) Connect negative (-) probe to terminal board TB3, test point TP31. (3) Place START / RUN / STOP switch in START position. (4) 20 to 32 VDC present?	If not present, remove and replace EMERGENCY STOP switch (Para. 4-20).
f. Check governor control A5 as follows: (1) Connect positive (+) probe of multimeter to A5-H. (2) Connect negative (-) probe to A5-J. (3) Place START / RUN / STOP switch in START position. (4) 20 to 32 VDC present?	If not present, remove and replace governor control (Para. 4-26).
g. Check governor actuator A6 as follows: (1) Place START / RUN / STOP switch in STOP position. (2) Does governor move to full fuel position?	If it does not, remove and replace governor actuator (Para. 4-55).

Table 4-4. Unit Level Troubleshooting (continued)

MALFUNCTION TEST OR INSPECTION	CORRECTIVE ACTION
2. ENGINE CRANKS BUT WILL NOT START (continued)	
h. Check malfunction indicator module as follows: (1) Disconnect electrical connector P4 from fault indicator module. (2) Attempt to start engine.	If engine starts, remove and replace fault indicator module (Para. 4-18).
i. Refer trouble to direct support level maintenance.	
3. ENGINE CRANKS SLOWLY, BATTERY RUNS DOWN PRIOR TO STARTING	
a. Defective / blown regulator fuse FU1.	Remove and replace fuse (Para. 4-25).
b. Check generator G1 as follows: (1) Connect positive (+) probe of multimeter to FU1-2. (2) Connect negative (-) probe to terminal board TB4-9. (3) Start generator set. (4) Reading shall be 36 VAC minimum.	If not 36 VAC minimum, refer to direct support level maintenance for replacement of permanent magnet alternator.
c. Check battery charging regulator A9 as follows: (1) Disconnect battery cable from negative (-) battery terminal. (2) Jump start generator set from NATO slave receptacle SR1. (3) Remove electrical cable from slave receptacle while generator set is running.	If unit shuts down, remove and replace regulator (Para. 4-29).
d. Refer trouble to direct support level maintenance.	

Table 4-4. Unit Level Troubleshooting (continued)

MALFUNCTION TEST OR INSPECTION	CORRECTIVE ACTION
4. ENGINE STARTS AND STOPS	
a. Check fuel lines for obstructions, kinks, or clogging. Inspect for leaks.	Remove and replace damaged or defective fuel lines.
b. Possible air in fuel system. Check for loose or damaged connections.	Tighten connections. Remove and replace damaged components as required.
c. Check for clogged fuel filter / water separator element.	Remove and replace filter / separator element (Para. 4-49).
d. Adjust engine valve clearance in accordance with TM 9-2815-257-24.	
e. Refer trouble to direct support level maintenance.	
5. ENGINE WILL NOT START IN COLD WEATHER	
a. Check PREHEAT switch S18 as follows: (1) Connect positive (+) probe of multimeter to switch S18-1. (2) Connect negative (-) probe to terminal board TB3, test point TP31. (3) Place PREHEAT switch in ON position. (4) 20 to 32 VDC present?	If not present, remove and replace PREHEAT switch (Para. 4-19).
b. Check engine preheat relay K13 as follows: (1) Connect positive (+) probe of multimeter to relay K13-A2. (2) Connect negative (-) probe to terminal board TB3, test point TP31. (3) Place PREHEAT switch in ON position. (4) 20 to 32 VDC present?	If not present, remove and replace relay (Para. 4-24).
c. Defective air heater H1.	Remove and replace air heater in accordance with TM 9-2815-257-24.

Table 4-4. Unit Level Troubleshooting (continued)

MALFUNCTION TEST OR INSPECTION	CORRECTIVE ACTION
6. ENGINE WILL NOT STOP WHEN EMERGENCY STOP SWITCH IS PRESSED	
a. Check EMERGENCY STOP switch S19 as follows: (1) Connect positive (+) probe of multimeter to terminal board TB3, test point TP32. (2) Connect negative (-) probe to terminal board TB3, test point TP31. (3) Place START / RUN / STOP switch in RUN position. (4) Press EMERGENCY STOP switch. (5) Reading shall go from 24 VDC to zero VDC.	If it does not drop to zero VDC, replace EMERGENCY STOP switch (Para. 4-20).
b. If voltage does drop to zero VDC and engine still runs, governor fuel linkage is not moving to the fuel shutoff position.	Visually check linkage and push lever to the off position.
7. ENGINE STARTS, NO VOLTAGE READING	
a. Check that power inverter / converter A8 voltage reconnection cover is closed.	Close and latch cover to activate power converter.
b. Measure voltage at power inverter / converter A8 terminal as follows: (1) Start generator set. (2) Connect multimeter to terminal L1-N. (3) Voltage reading shall be 120 VAC. (4) Connect multimeter to terminal L2-N. (5) Voltage reading shall be 120 VAC. (6) Connect multimeter to terminal L1-L2. (7) Voltage reading shall be 240 VAC if in 120/240 V connection configuration, zero VAC if in 120 V connection configuration.	If voltages not correct, refer trouble to direct support level maintenance.
c. If voltages in b. are correct, check for voltage at VOLTAGE meter.	If voltage is not present, remove and replace VOLTAGE meter (Para. 4-16).

Table 4-4. Unit Level Troubleshooting (continued)

MALFUNCTION TEST OR INSPECTION	CORRECTIVE ACTION
8. GENERATOR SET FAILS TO SUPPLY POWER TO THE LOAD	
a. Using a multimeter, check generator set output voltage at load terminals L1, L2 and N (Figure 1-5).	If voltages are correct and all faults are reset, problem is not with the generator set.
b. Check for proper output voltage readings at power inverter / converter terminals L1, L2, N.	If voltages are incorrect, replace power inverter / converter (Para. 4-52).
c. Check load contactor relay K1 as follows: (1) Connect positive (+) probe of multimeter to K1 terminal 1(+). (2) Connect negative (-) probe to K1 terminal 2(-). (3) Is 24 VDC present?	If present, remove and replace relay K1 (Para. 4-24).
d. Hold CIRCUIT INTERRUPTER switch S5 in closed position. Is 24 VDC present now?	If present, replace relay K1 (Para. 4-24).
e. Close BATTLE SHORT switch and hold CIRCUIT INTERRUPTER switch in closed position. Is 24 VDC present now? Does relay K1 now close?	If present, remove and replace power inverter / converter (Para. 4-52).
9. NO KW READING WHEN LOAD IS APPLIED	
a. Check for open LOAD meter coil as follows: (1) Connect positive (+) probe of multimeter to power converter A8, P17 – pin 15. (2) Connect negative (-) probe to A8, P17 – pin 16. (3) 100 ohms (nominal) present?	If 100 ohms is present, remove and replace power inverter / converter (Para. 4-52).
b. If 100 ohms is not present at A8, check for 100 ohms at LOAD meter terminals.	If not present, remove and replace LOAD meter (Para. 4-17).
c. If 100 ohms is present at LOAD meter, check wiring between LOAD meter and P17.	Remove and replace damaged wiring as required.

Table 4-4. Unit Level Troubleshooting (continued)

MALFUNCTION TEST OR INSPECTION	CORRECTIVE ACTION
10. NO POWER AT CONVENIENCE RECEPTACLE	
a. Check that GROUND FAULT CIRCUIT INTERRUPTER (GFCI) is not tripped.	Reset GFCI by depressing button.
b. Check that CB3 on GFCI (inside set) is not tripped.	Reset CB3.
c. Check GFCI CB3 at TB4 as follows: (1) Connect positive (+) probe of multimeter to terminal board TB4, pin 1. (2) Connect negative (-) probe to terminal board TB4, pin 3. (3) Start generator set. (4) 120 ± 2 VAC present?	If voltage is present, remove and replace GFCI (Para. 4-31).
d. Defective convenience receptacle.	Remove and replace convenience receptacle (Para. 4-30).
11. GENERATOR SET CAUSES RADIO INTERFERENCE	
a. Defective EMI filter.	Remove and replace EMI filter (Para. 4-33).
b. Defective power inverter / converter.	Remove and replace power inverter / converter (Para. 4-52).
12. CIRCUIT INTERRUPTER WILL NOT CLOSE	
a. Check relay K8 (part of power inverter / converter A8) as follows: (1) Start generator set. (2) Place BATTLE SHORT switch in ON position. (3) Does circuit interrupter close?	If not, remove and replace power inverter / converter (Para. 4-52).
b. Check fault lockout relay K12 as follows: (1) Connect positive (+) probe of multimeter to K12-12. (2) Connect negative (-) probe to K12-4. (3) Place START / RUN / STOP switch in STOP position. (4) Zero ohms reading?	If not zero ohms, remove and replace relay (Para. 4-24).

Table 4-4. Unit Level Troubleshooting (continued)

MALFUNCTION TEST OR INSPECTION	CORRECTIVE ACTION
12. CIRCUIT INTERRUPTER WILL NOT CLOSE (continued)	
c. Check CIRCUIT INTERRUPTER switch S5 as follows: (1) Connect positive (+) probe of multimeter to S5-2. (2) Connect negative (-) probe to S5-5. (3) Place START / RUN / STOP switch in STOP position. (4) Hold CIRCUIT INTERRUPTER switch in CLOSED position. (5) Zero ohms reading?	If not zero ohms, remove and replace CIRCUIT INTERRUPTER switch (Para. 4-19).
d. Check relays K1 and K15 as follows: (1) Start generator set. (2) Connect positive (+) probe of multimeter to S5-2. (3) Connect negative (-) probe to terminal board TB3, test point TP31. (4) Hold CIRCUIT INTERRUPTER switch in CLOSED position. (5) Check voltage reading.	If voltage is 0 VDC, remove and replace relay K1 (Para. 4-24). If voltage is 20 to 32 VDC, remove and replace relay K15 (Para. 4-24).
13. CIRCUIT INTERRUPTER WILL NOT REMAIN CLOSED WHEN CIRCUIT INTERRUPTER SWITCH IS RELEASED	
a. Check CIRCUIT INTERRUPTER switch S5 as follows: (1) Connect positive (+) probe of multimeter to S5-2. (2) Connect negative (-) probe to S5-5. (3) Place START / RUN / STOP switch in STOP position. (4) Hold CIRCUIT INTERRUPTER switch in CLOSED position. (5) Zero ohms reading?	If not zero ohms, remove and replace CIRCUIT INTERRUPTER switch (Para. 4-19).
b. Check EMERGENCY STOP switch as follows: (1) Connect positive (+) probe of multimeter to S19-B2. (2) Connect negative (-) probe to S19-B1. (3) Place START / RUN / STOP switch in STOP position. (4) Zero ohms reading?	If not zero ohms, remove and replace EMERGENCY STOP switch (Para. 4-20).
c. Relay K1 auxiliary is defective.	Remove and replace relay (Para. 4-24).

Table 4-4. Unit Level Troubleshooting (continued)

MALFUNCTION TEST OR INSPECTION	CORRECTIVE ACTION
14. AUXILIARY FUEL SYSTEM WILL NOT ENERGIZE	
a. Check AUX FUEL switch S17 as follows: (1) Connect positive (+) probe of multimeter to terminal board TB5, pin 1. (2) Connect negative (-) probe to terminal board TB3, test point TP31. (3) Place START / RUN / STOP switch in RUN position. (4) Place AUX FUEL switch in the ON position. (5) 20 to 32 VDC present?	If not present, remove and replace AUX FUEL switch (Para. 4-19).
b. Check diode CR3 as follows: (1) Connect positive (+) probe of multimeter to terminal board TB5, pin 1. (2) Connect negative (-) probe to terminal board TB3, test point TP31. (3) Place START / RUN / STOP switch in RUN position. (4) Place AUX FUEL switch in the ON position. (5) 20 to 32 VDC present?	If not present, remove and replace diode (Para. 4-25).
c. Check fuel level switch FL2 as follows: (1) Connect positive (+) probe of multimeter to fuel transfer relay K14-14. (2) Connect negative (-) probe to terminal board TB3, test point TP31. (3) Place START / RUN / STOP switch in RUN position. (4) Place AUX FUEL switch in the ON position. (5) 20 to 32 VDC present?	If not present, remove and replace fuel level switch (Para. 4-39).
d. Check auxiliary fuel transfer relay K14 as follows: (1) Connect positive (+) probe of multimeter to fuel transfer relay K14-9. (2) Connect negative (-) probe to terminal board TB3, test point TP31. (3) Place START / RUN / STOP switch in RUN position. (4) Place AUX FUEL switch in the ON position. (5) 20 to 32 VDC present?	If not present, emove and replace relay (Para. 4-24).
e. Defective auxiliary fuel pump E1.	Remove and replace auxiliary fuel pump (Para. 4-51).

Table 4-4. Unit Level Troubleshooting (continued)

MALFUNCTION TEST OR INSPECTION	CORRECTIVE ACTION
15. BATTLE SHORT INDICATOR WILL NOT ILLUMINATE WHEN BATTLE SHORT SWITCH IS ON	
a. Check BATTLE SHORT switch S7 as follows: (1) Connect positive (+) probe of multimeter to switch S7-3. (2) Connect negative (-) probe to terminal board TB3, test point TP31. (3) Place START / RUN / STOP switch in RUN position. (4) Zero VDC reading?	If not zero VDC, remove and replace BATTLE SHORT switch (Para. 4-19).
b. Defective fault indicator module A2.	Remove and replace fault indicator module (Para. 4-18).
16. FAN (B2) DOES NOT OPERATE AT HIGH TEMPERATURE	
a. Check temperature switch S20 as follows (60 Hz model MEP 831A): (1) Connect positive (+) probe of multimeter to switch at S20-2. (2) Connect negative (-) probe to terminal board TB3, test point TP35. (3) Start generator set. Enclosure temperature must be above 100°F. (4) 120 ± 2 VAC present?	If not present, remove and replace temperature switch (Para. 4-48).
b. Check temperature switch S20 as follows (400 Hz model MEP 832A): (1) Connect positive (+) probe of multimeter to switch at S20-2. (2) Connect negative (-) probe to terminal board TB3, test point TP31. (3) Place START / RUN / STOP switch in RUN position. Enclosure temperature must be above 100°F. (4) 20 to 32 VDC present?	If not present, remove and replace temperature switch (Para. 4-48).
c. Defective fan B2.	Remove and replace fan (Para. 4-48).

Table 4-4. Unit Level Troubleshooting (continued)

MALFUNCTION TEST OR INSPECTION	CORRECTIVE ACTION
17. FAN (B3) DOES NOT OPERATE AT HIGH TEMPERATURE	
a. Check temperature switch S21 as follows (60 Hz model MEP 831A): (1) Connect positive (+) probe of multimeter to switch at S21-2. (2) Connect negative (-) probe to terminal board TB3, test point TP35. (3) Start generator set. Enclosure temperature must be above 100°F. (4) 120 ± 2 VAC present?	If not present, remove and replace temperature switch (Para. 4-48).
b. Check temperature switch S21 as follows (400 Hz model MEP 832A): (1) Connect positive (+) probe of multimeter to switch S21-2. (2) Connect negative (-) probe to terminal board TB3, test point TP31. (3) Place START / RUN / STOP switch in RUN position. Enclosure temperature must be above 100°F. (4) 20 to 32 VDC present?	If not present, remove and replace temperature switch (Para. 4-48).
c. Defective fan B3.	Remove and replace fan (Para. 4-48).
18. ENGINE EMITS WHITE SMOKE	
a. Check engine oil level to see if it is too high.	If high, drain and service engine lubricating oil (Para. 4-1).
b. Check for contaminants in the oil system.	If contaminated, drain and service engine lubricating oil (Para. 4-1).
c. Check for clogged fuel filter / water separator element.	If clogged, remove and replace filter / separator element (Para. 4-49).
d. Adjust engine valve clearance in accordance with TM 9-2815-257-24.	
e. Refer trouble to direct support level maintenance.	

Table 4-4. Unit Level Troubleshooting (continued)

MALFUNCTION TEST OR INSPECTION	CORRECTIVE ACTION
19. ENGINE EMITS BLACK SMOKE	
a. Check for clogged, sticking, or worn fuel injector nozzle.	If faulty, remove and replace in accordance with TM 9-2815-257-24.
b. Refer trouble to direct support maintenance level.	
20. MALFUNCTION INDICATORS DO NOT ILLUMINATE WHEN PUSH TEST SWITCH IS PRESSED	
a. Check for 20 to 32 DC voltage at fault indicator module A2.	If not present, remove and replace fault indicator module (Para. 4-18).
21. ENGINE HIGH TEMP INDICATOR ILLUMINATES	
a. Check engine cylinder fins for accumulated dirt and grime. Check for blockages.	Remove blockages. Clean dirty fins in accordance with TM 9-2815-257-24.
b. Refer trouble to direct support level maintenance.	
22. LOW OIL PRESSURE INDICATOR ILLUMINATES	
a. Check for engine oil leaks.	Refer to TM 9-2815-257-24 for engine maintenance.
b. Clogged or defective engine oil filter.	Remove and replace engine oil filter in accordance with TM 9-2815-257-24.
c. Check engine oil pressure switch OP as follows: (1) Disconnect two wires from oil pressure switch. (2) Check for continuity between switch terminals. (3) With the generator set shut down, the switch should be closed. (4) With the generator set running, the switch should be open. (5) Does switch operate properly?	Remove and replace engine oil pressure switch in accordance with TM 9-2815-257-24.

Table 4-4. Unit Level Troubleshooting (continued)

MALFUNCTION TEST OR INSPECTION	CORRECTIVE ACTION
23. NO FUEL INDICATOR ILLUMINATES	
a. Conduct visual check to verify that fuel is in tank.	Service fuel as required.
b. Check fuel level switch FL2 as follows: (1) Connect positive (+) probe of multimeter to fuel transfer relay K14-14. (2) Connect negative (-) probe to terminal board TB3, test point TP31. (3) Place START / RUN / STOP switch in RUN position. (4) Place AUX FUEL switch in the ON position. (5) 20 to 32 VDC present?	If not present, remove and replace fuel level switch (Para. 4-39).

Section VI. UNIT LEVEL MAINTENANCE PROCEDURES

4-11. GENERATOR SET MAINTENANCE

This task covers general generator set inspection and repair procedures.

INITIAL SETUP

Tools:
Tool Kit, General Mechanic's Automotive (Item 2, App. B, Sect. III)

Parts/Materials:
Paint, CARC, Green (Item 10, App. E)
Paint, CARC, Black (Item 11, App. E)

Equipment Condition:
Generator set shut down (Para. 2-9)

A. INSPECTION.

1. Inspect generator set enclosure for dents, cracks, warping, or other damage. Check all covers, ducts, and panels for damage and security of attachment.

2. Inspect painted surfaces for chips, scratches, bare metal, roughness, or corrosion.

3. Inspect cover and panel latches for proper operation. Latches should operate smoothly, free of binding.

4. Open enclosure cover and inspect insulation material for damage. Ensure insulation is securely attached to component.

5. Inspect generator set lifting and tie down devices for security of attachment.

B. REPAIR.

WARNING

CARC paint dust is a heath hazard. Wear protective eyewear, mask, and gloves when sanding CARC painted surfaces. Failure to observe this warning can result in personal injury.

1. Repair painted surfaces of enclosure by removing loose or chipped paint. Sand surfaces until smooth and remove all evidence of corrosion. Mask unpainted surfaces before painting. Paint generator set using CARC paint, color green 383, in accordance with MIL-T-704, Type G for aluminum, and Type F for steel.

2. Stencil markings shall be applied using CARC paint, color black, in accordance with MIL-C-46168.

3. Repair of parts, other than painting, is limited to the removal and replacement of damaged components. Refer to applicable paragraphs in this chapter for instructions.

4-12. CONTROL BOX ASSEMBLY MAINTENANCE

This task covers removal, inspection, and installation.

INITIAL SETUP

Tools:
Tool Kit, General Mechanic's Automotive (Item 2, App. B, Sect. III)

Equipment Condition:
Battery charging regulator removed (Para. 4-29)

A. REMOVAL.

1. Remove rear panel (1, Figure 4-3) by removing thirteen screws (2), lockwashers (3), and washers (4).

2. Remove left side panel (5) by removing eight screws (6), eight washers (7), and eight locknuts (8). Remove four screws (9), four screws (12), eight washers (10), and eight locknuts (11).

3. Remove two screws (13), washers (14), locknuts (15), and spacer (16) from left side cover support mounting bracket (17). Fold support up to gain clearance for control box.

4. Remove convenience receptacle (Para. 4-30).

5. Remove ground fault circuit interrupter (Para. 4-31).

6. Disconnect and tag wires from terminal boards TB4 and TB6, contactor K1, and fuse FU1 located on rear of control box (24). Disconnect J7 connector.

7. Remove five screws (18), washers (19), and locknuts (20) from right side panel (21).

8. Remove two screws (22), washers (23), and locknuts (20) from control box (24).

9. Remove two screws (25), lockwashers (26), and washers (27) from bracket (28).

10. Remove four screws (29), washers (30), locknuts (31), and terminal wrench (32).

11. Remove screw (33), washer (34), and locknut (35).

12. Slide control box (24) out of enclosure. Remove shim (36).

B. INSPECTION.

1. Inspect controls and indicators for corrosion and obvious damage. Inspect meters for broken glass.

2. Inspect external relays and terminal boards for evidence of electrical short. Inspect for electrical burn marks, corrosion, and damage.

4-12. CONTROL BOX ASSEMBLY MAINTENANCE - cont.

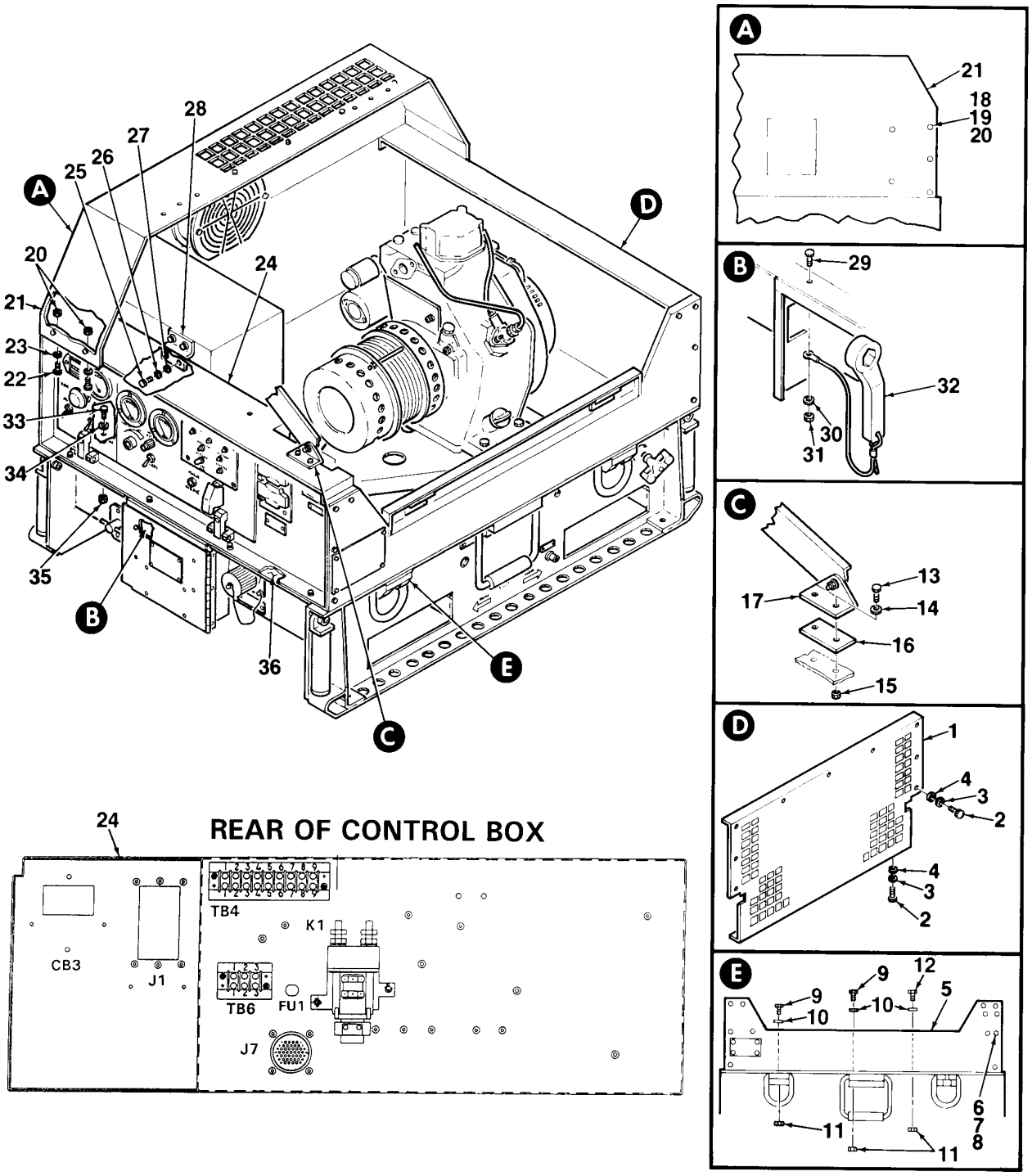

Figure 4-3. Control Box Assembly
(Sheet 1 of 2)

4-12. CONTROL BOX ASSEMBLY MAINTENANCE - cont.

3. Inspect connector J7 for damaged pin receptacles. Check for corrosion. Ensure connector is securely attached to rear of control panel.

4. Inspect control panel gaskets for cuts, tears, deterioration, or other damage. Inspect gasket on rear of housing where left side panel mounts. Ensure gaskets are securely attached. Replace as required.

5. Remove and replace any component that is damaged to the extent that it will effect the safe operation of the generator set.

C. INSTALLATION.

NOTE

Loosely install control box attaching parts. Tighten once control box is properly aligned and all mating components are attached.

1. Install control box (24, Figure 4-3) and shim (36) into enclosure.

2. Install screw (33), washer (34), and locknut (35).

3. Install four screws (29), washers (30), locknuts (31), and terminal wrench (32).

4. Install two screws (25), lockwashers (26), and washers (27) onto bracket (28).

5. Install two screws (22), washers (23), and locknuts (20).

6. Install five screws (18), washers (19), and locknuts (20) into right side panel (21).

7. Connect electrical wires to terminal boards TB4 and TB6, contactor K1, and fuse FU1 located on rear of control box (24). Connect connector J7.

8. Install ground fault circuit interrupter (Para. 4-31).

9. Install convenience receptacle (Para. 4-30).

10. Install two screws (13), washers (14), locknuts (15), and spacer (16) onto left side cover support mounting bracket (17).

11. Install left side panel (5) using eight screws (6), eight washers (7), and eight locknuts (8). Install four screws (9), four screws (12), eight washers (10), and eight locknuts.

12. Install rear panel (1) using thirteen screws (2), washers (3), and lockwashers (4).

13. Install battery charging regulator (Para. 4-29).

4-12. CONTROL BOX ASSEMBLY MAINTENANCE - cont.

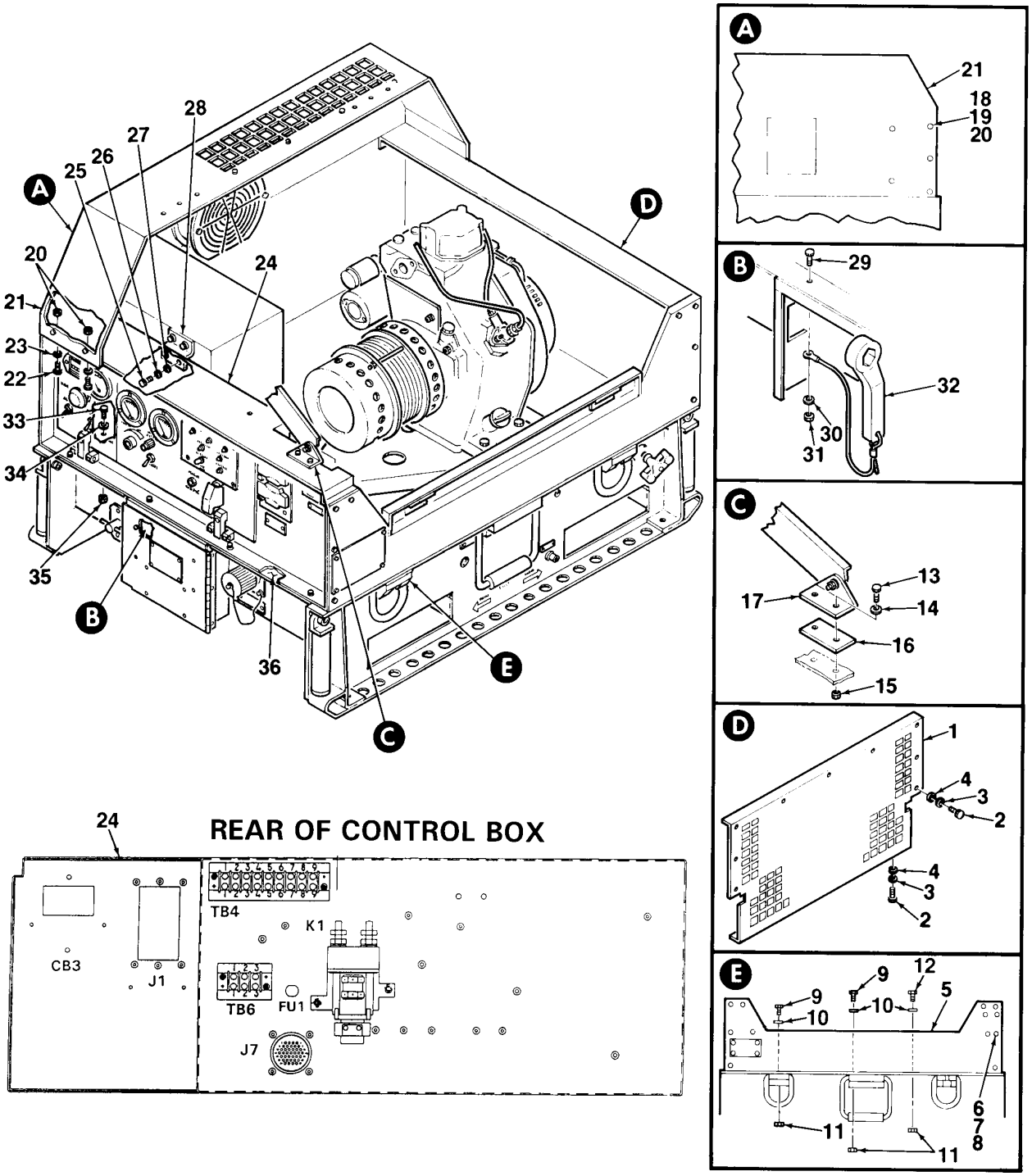

Figure 4-3. Control Box Assembly
(Sheet 2 of 2)

4-13. CONTROL PANEL ASSEMBLY MAINTENANCE

This task covers removal, inspection, and installation.

INITIAL SETUP

Tools:
Tool Kit, General Mechanic's Automotive (Item 2, App. B, Sect. III)

Equipment Condition:
Generator set shut down (Para. 2-9)
Battery cables disconnected
Cable disconnected for SLAVE RECEPTACLE

A. REMOVAL.

NOTE

It is not necessary to remove the control panel to remove control panel components. See specific tasks to remove control panel components.

1. Turn quarter-turn fasteners (1, Figure 4-4) to unlock and open control panel (2).
2. Tag and disconnect electrical wiring from rear of control panel components.
3. Release cable lanyard (3) from control panel (1) by removing attaching screw (4), washer (5), and locknut (6).
4. Remove control panel hinges (7) and hinge spacers (8) from control box by removing four nuts (9).
5. Remove hinges from control panel (2) by removing two nuts (9).

B. INSPECTION.

1. Inspect controls and indicators for corrosion and obvious damage. Inspect meters for broken glass.
2. Inspect for evidence of electrical short, electrical burn marks, corrosion, and damage.
3. Inspect electrical wiring for cuts, crimps, bare wire, or other damage. Ensure connectors are securely attached. Check for bent, broken, or missing pins.
4. Inspect control panel gaskets (7, Figure 4-4) for cuts, tears, permanent set, deterioration, or other damage. Ensure gasket is securely attached. Replace as required.
5. Remove and replace any component that is damaged to the extent that it will effect the safe operation of the generator set.

4-13. CONTROL PANEL ASSEMBLY MAINTENANCE - cont.

C. INSTALLATION.

1. Attach two hinges (7, Figure 4-4) to control panel (2) using two nuts (9).
2. Install hinge spacers (8) onto hinges (7). Mate hinges to control box and secure using four nuts (9).
3. Connect cable lanyard (3) to control panel (2) using attaching screw (4), washer (5), and locknut (6).
4. Connect electrical wires to rear of control panel components.
5. Close control panel (2) and lock in place using quarter-turn fasteners (1).

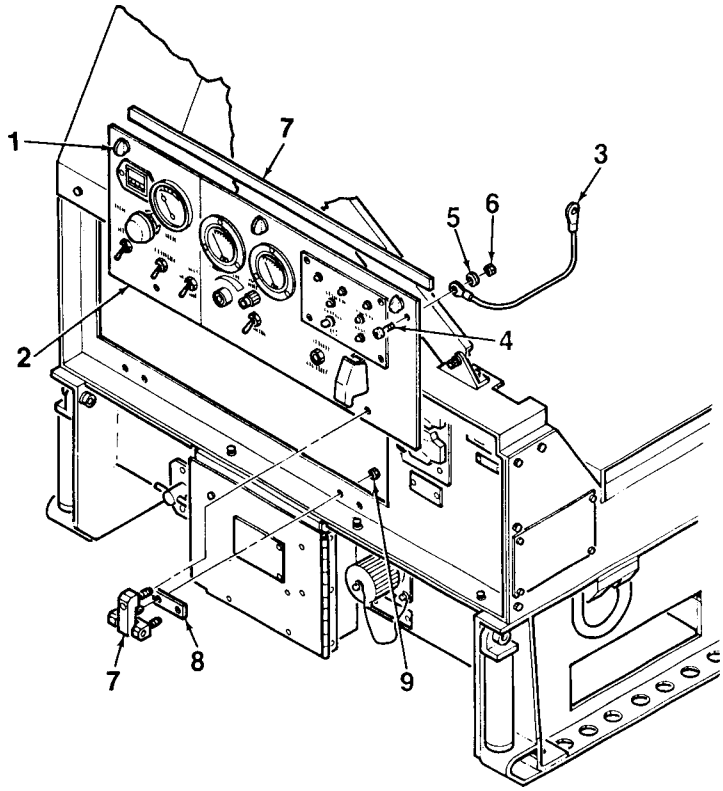

Figure 4-4. Control Panel Assembly

4-14. HOURS METER MAINTENANCE

This task covers removal, inspection, and installation.

INITIAL SETUP

Tools:
Tool Kit, General Mechanic's Automotive (Item 2, App. B, Sect. III)

Equipment Condition:
Generator set shut down (Para. 2-9)
Battery cables disconnected
Cable disconnected for SLAVE RECEPTACLE

A. REMOVAL.

1. Turn quarter-turn fasteners (1, Figure 4-5) to unlock and open control panel (2).

2. Tag and disconnect electrical wiring from the rear of HOURS meter (3).

3. Remove HOURS meter (3) from control panel (2) by removing two screws (4), lockwashers (5), and nuts (6).

B. INSPECTION.

1. Inspect HOURS meter for corrosion and obvious damage. Inspect for broken glass.

2. Inspect electrical wiring for cuts, crimps, bare wire, or other damage. Ensure connectors are securely attached.

3. Remove and replace any component that is damaged to the extent that it will effect the safe operation of the generator set.

C. INSTALLATION.

1. Mate HOURS meter (3, Figure 4-5) to control panel (2). Secure using two screws (4), lockwashers (5), and nuts (6).

2. Connect electrical wiring to the rear of HOURS meter (3).

3. Close control panel (2) and lock in place using quarter-turn fasteners (1).

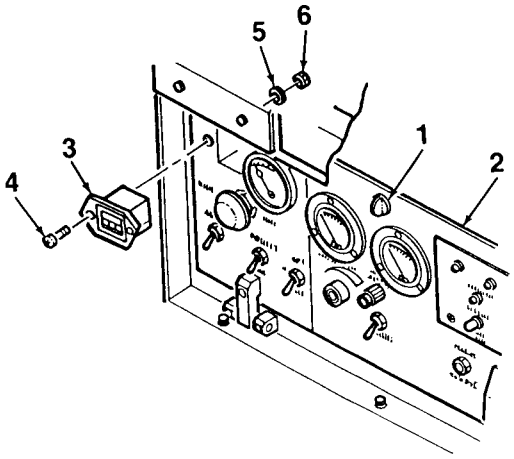

Figure 4-5. HOURS Meter

4-15. FUEL LEVEL GAUGE MAINTENANCE

This task covers removal, inspection, and installation.

INITIAL SETUP

Tools:
Tool Kit, General Mechanic's Automotive (Item 2, App. B, Sect. III)

Equipment Condition:
Generator set shut down (Para. 2-9)
Battery cables disconnected
Cable disconnected for SLAVE RECEPTACLE

A. REMOVAL.

1. Turn quarter-turn fasteners (1, Figure 4-6) to unlock and open control panel (2).

2. Tag and disconnect electrical wiring from the rear of FUEL LEVEL gauge (3).

3. Remove FUEL LEVEL gauge (3) from control panel (2) by removing two nuts (4), lockwashers (5), and bracket (6).

B. INSPECTION.

1. Inspect FUEL LEVEL gauge for corrosion and obvious damage. Inspect for broken glass.

2. Inspect electrical wiring for cuts, crimps, bare wire, or other damage. Ensure connectors are securely attached.

3. Remove and replace any component that is damaged to the extent that it will effect the safe operation of the generator set.

C. INSTALLATION.

1. Install FUEL LEVEL gauge (3, Figure 4-6) onto control panel (2) using two nuts (4), lockwashers (5), and bracket (6).

2. Connect electrical wiring to the rear of FUEL LEVEL gauge (3).

3. Close control panel (2) and lock in place using quarter-turn fasteners (1).

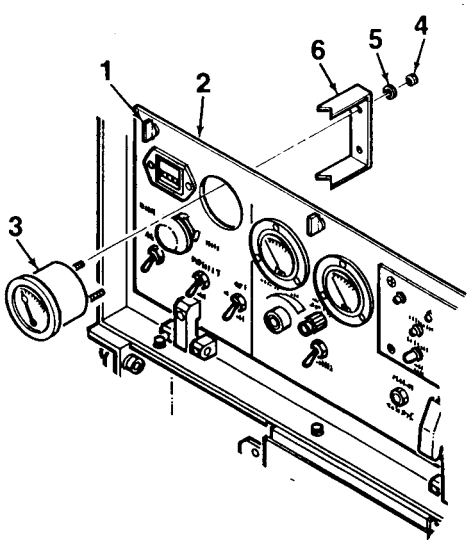

Figure 4-6. FUEL LEVEL Gauge

4-16. VOLTAGE METER MAINTENANCE

This task covers removal, inspection, and installation.

INITIAL SETUP

Tools:
Tool Kit, General Mechanic's Automotive (Item 2, App. B, Sect. III)

Equipment Condition:
Generator set shut down (Para. 2-9)
Battery cables disconnected
Cable disconnected for SLAVE RECEPTACLE

A. REMOVAL.

1. Turn quarter-turn fasteners (1, Figure 4-7) to unlock and open control panel (2).

2. Tag and disconnect electrical wiring from the rear of VOLTAGE meter (3).

3. Remove VOLTAGE meter (3) from control panel (2) by removing three screws (4), lockwashers (5), and nuts (6).

B. INSPECTION.

1. Inspect VOLTAGE meter for corrosion and obvious damage. Inspect for broken glass.

2. Inspect electrical wiring for cuts, crimps, bare wire, or other damage. Ensure connectors are securely attached.

3. Remove and replace any component that is damaged to the extent that it will effect the safe operation of the generator set.

C. INSTALLATION.

1. Mate VOLTAGE meter (3, Figure 4-7) to control panel (2). Secure using three screws (4), lockwashers (5), and nuts (6).

2. Connect electrical wiring to the rear of VOLTAGE meter (3).

3. Close control panel (2) and lock in place using quarter-turn fasteners (1).

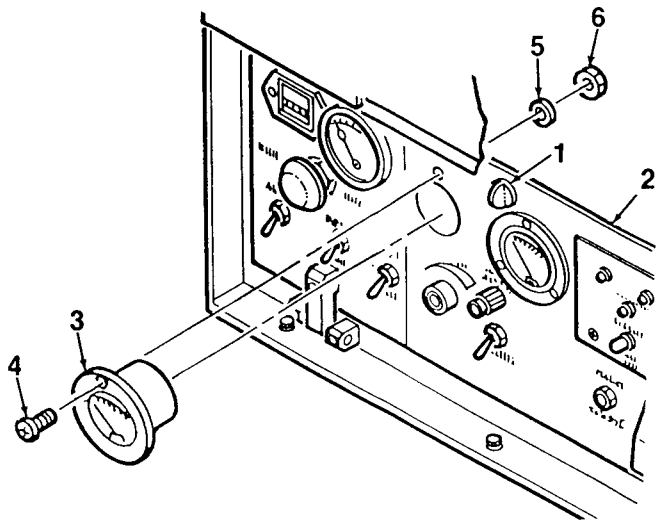

Figure 4-7. VOLTAGE Meter

4-17. LOAD METER MAINTENANCE

This task covers removal, inspection, and installation.

INITIAL SETUP

Tools:
Tool Kit, General Mechanic's Automotive (Item 2, App. B, Sect. III)

Equipment Condition:
Generator set shut down (Para. 2-9)
Battery cables disconnected
Cable disconnected for SLAVE RECEPTACLE

A. REMOVAL.

1. Turn quarter-turn fasteners (1, Figure 4-8) to unlock and open control panel (2).

2. Tag and disconnect electrical wiring from the rear of LOAD meter (3).

3. Remove LOAD meter (3) from control panel (2) by removing three screws (4), lockwashers (5), and nuts (6).

B. INSPECTION.

1. Inspect LOAD meter for corrosion and obvious damage. Inspect for broken glass.

2. Inspect electrical wiring for cuts, crimps, bare wire, or other damage. Ensure connectors are securely attached.

3. Remove and replace any component that is damaged to the extent that it will effect the safe operation of the generator set.

C. INSTALLATION.

1. Mate LOAD meter (3, Figure 4-8) to control panel (2). Secure using three screws (4), lockwashers (5), and nuts (6).

2. Connect electrical wiring to the rear of LOAD meter (3).

3. Close control panel (2) and lock in place using quarter-turn fasteners (1).

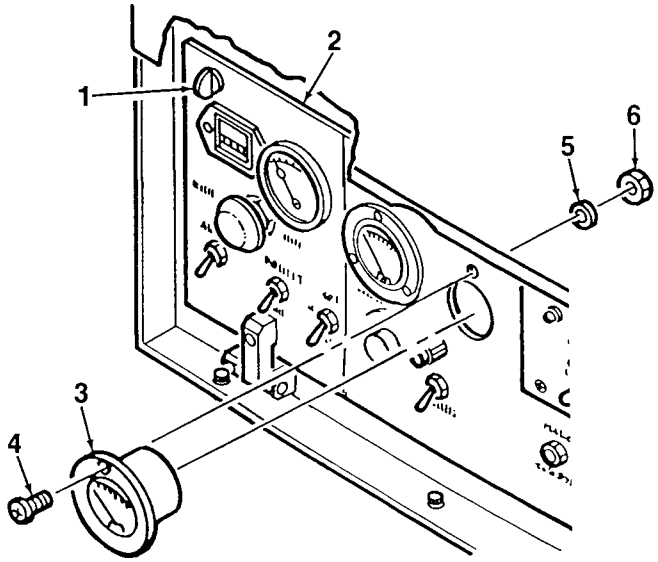

Figure 4-8. LOAD Meter

4-18. FAULT INDICATOR MODULE MAINTENANCE

This task covers removal, inspection, and installation.

INITIAL SETUP

Tools:
Tool Kit, General Mechanic's Automotive (Item 2, App. B, Sect. III)

Equipment Condition:
Generator set shut down (Para. 2-9)
Battery cables disconnected
Cable disconnected for SLAVE RECEPTACLE

A. REMOVAL.

1. Turn quarter-turn fasteners (1, Figure 4-9) to unlock and open control panel (2).

2. Tag and disconnect electrical wiring from the rear of fault indicator module (3).

3. Remove fault indicator module (3) from control panel (2) by removing four screws (4), washers (5), and locknuts (6).

B. INSPECTION.

1. Inspect fault indicator module for corrosion and obvious damage. Inspect for broken indicator lights.

2. Inspect electrical wiring for cuts, crimps, bare wire, or other damage. Ensure connectors are securely attached.

3. Remove and replace any component that is damaged to the extent that it will effect the safe operation of the generator set.

C. INSTALLATION.

1. Mate fault indicator module (3, Figure 4-9) to control panel (2). Secure using four screws (4), washers (5), and locknuts (6).

2. Connect electrical wiring to the rear of fault indicator module (3).

3. Close control panel (2) and lock in place using quarter-turn fasteners (1).

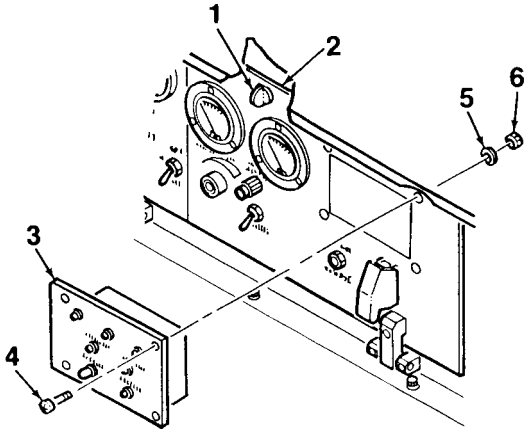

Figure 4-9. Fault Indicator Module

4-19. OPERATOR SWITCH MAINTENANCE

This task covers removal, inspection, and installation.

INITIAL SETUP

Tools:
Tool Kit, General Mechanic's Automotive (Item 2, App. B, Sect. III)

Equipment Condition:
Generator set shut down (Para. 2-9)
Battery cables disconnected
Cable disconnected for SLAVE RECEPTACLE

A. REMOVAL.

1. Turn quarter-turn fasteners (1, Figure 4-10) to unlock and open control panel (2).

2. Tag and disconnect electrical wiring from the rear of operator switches (3, 6, 9, 12, 15) as required.

3. Remove AUX FUEL switch (3) from control panel (2) by removing attaching nut (4) and lockwasher (5).

4. Remove PREHEAT switch (6) from control panel (2) by removing attaching nut (7) and lockwasher (8).

5. Remove START / RUN / STOP switch (9) from control panel (2) by removing attaching nut (10) and lockwasher (11).

6. Remove CIRCUIT INTERRUPTER switch (12) from control panel (2) by removing attaching nut (13) and lockwasher (14).

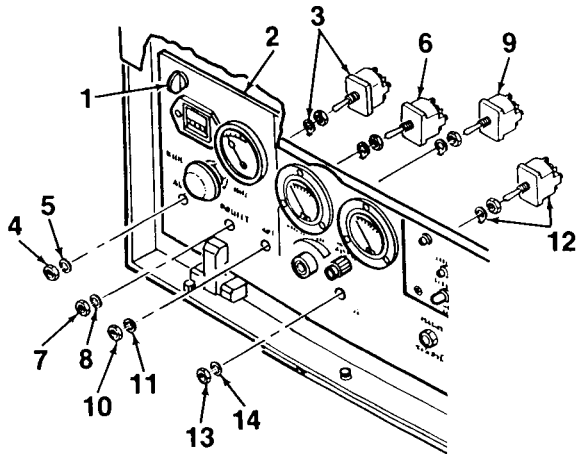

Figure 4-10. Operator Switches (Sheet 1 of 2)

4-19. OPERATOR SWITCH MAINTENANCE - cont.

7. Remove BATTLE SHORT switch (15) and switch guard (16) from control panel (2) by removing attaching nut (17) and lockwasher (18).

B. INSPECTION.

1. Inspect switches for obvious damage. Check for corrosion or evidence of electrical short.

2. Inspect electrical wiring for cuts, crimps, bare wire, or other damage. Ensure connectors are securely attached.

3. Remove and replace any component that is damaged to the extent that it will effect the safe operation of the generator set.

C. INSTALLATION.

1. Install AUX FUEL switch (3, Figure 4-10) onto control panel (2) using attaching nut (4) and lockwasher (5).

2. Install PREHEAT switch (6) onto control panel (2) using attaching nut (7) and lockwasher (8).

3. Install START / RUN / STOP switch (9) onto control panel (2) using attaching nut (10) and lockwasher (11).

4. Install CIRCUIT INTERRUPTER switch (12) onto control panel (2) using attaching nut (13) and lockwasher (14).

5. Remove BATTLE SHORT switch (15) and switch guard (16) from control panel (2) by removing attaching nut (17) and lockwasher (18).

6. Connect electrical wiring to the rear of switches (3, 6, 9, 12, 15).

7. Close control panel (2) and lock in place using quarter-turn fasteners (1).

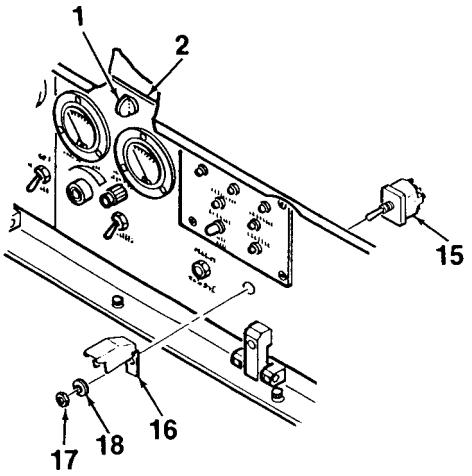

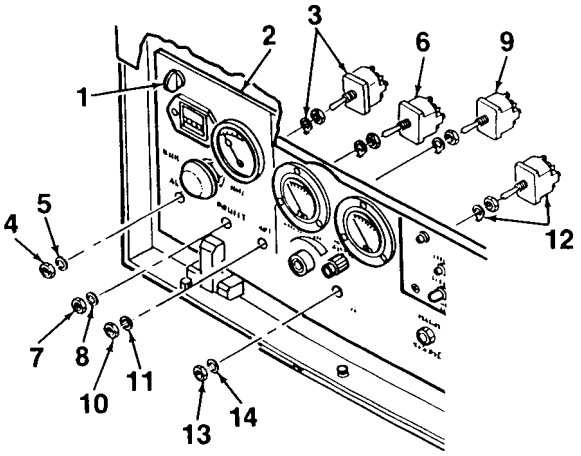

Figure 4-10. Operator Switches (Sheet 2 of 2)

4-20. EMERGENCY STOP SWITCH MAINTENANCE

This task covers removal, inspection, and installation.

INITIAL SETUP

Tools:
Tool Kit, General Mechanic's Automotive (Item 2, App. B, Sect. III)

Equipment Condition:
Generator set shut down (Para. 2-9)
Battery cables disconnected
Cable disconnected for SLAVE RECEPTACLE

A. REMOVAL.

1. Turn quarter-turn fasteners (1, Figure 4-11) to unlock and open control panel (2).

2. Tag and disconnect electrical wiring from the rear of EMERGENCY STOP switch (3).

3. Remove yellow locking tab (4) from side of switch (3). Rotate lever (5) on switch to unlock position and remove switch from rear of control panel (2).

NOTE

Observe orientation of push button (6) before removing to aid in assembly.

4. Remove push button (6) from control panel (2) by removing locknut (7) and gasket (8).

B. INSPECTION.

1. Inspect EMERGENCY STOP switch for corrosion and obvious damage. Inspect electrical connectors for damage and evidence of short.

2. Depress switch shaft to check for proper operation. Switch must depress and reset smoothly.

3. Inspect electrical wiring for cuts, crimps, bare wire, or other damage. Ensure connectors are securely attached.

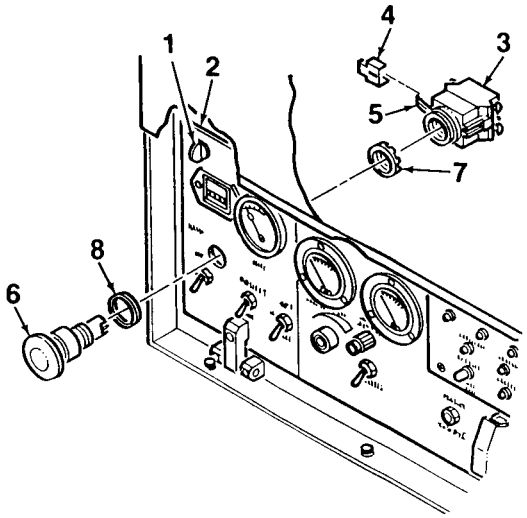

Figure 4-11. EMERGENCY STOP Switch (Sheet 1 of 2)

4-20. EMERGENCY STOP SWITCH MAINTENANCE - cont.

4. Remove and replace any component that is damaged to the extent that it will effect the safe operation of the generator set.

C. INSTALLATION.

1. Install push button (6, Figure 4-11) onto control panel (2) using locknut (7), and gasket (8).

2. Install EMERGENCY STOP switch (3) onto rear of control panel (2). Rotate lever (5) to lock switch in place. Install locking tab (4).

3. Connect electrical wiring to the rear of EMERGENCY STOP switch (3).

4. Close control panel (2) and lock in place using quarter-turn fasteners (1).

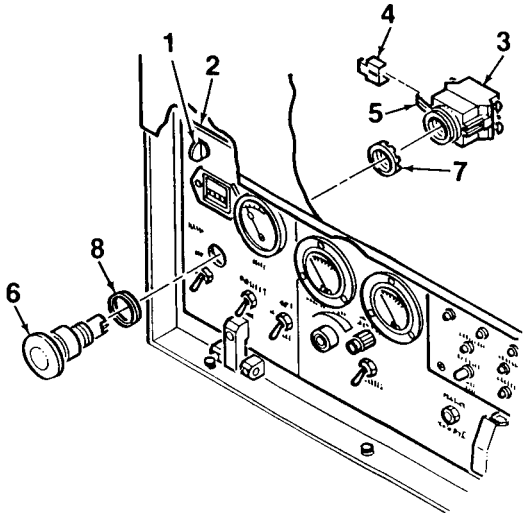

Figure 4-11. EMERGENCY STOP Switch (Sheet 2 of 2)

4-21. DC CIRCUIT BREAKER MAINTENANCE

This task covers removal, inspection, and installation.

INITIAL SETUP

Tools:
Tool Kit, General Mechanic's Automotive (Item 2, App. B, Sect. III)

Equipment Condition:
Generator set shut down (Para. 2-9)
Battery cables disconnected
Cable disconnected for SLAVE RECEPTACLE

A. REMOVAL.

1. Turn quarter-turn fasteners (1, Figure 4-12) to unlock and open control panel (2).

2. Tag and disconnect electrical wiring from the rear of DC CIRCUIT BREAKER switch (3).

3. Remove DC CIRCUIT BREAKER switch (3) from control panel (2) by removing attaching nut (4) and lockwasher (5).

B. INSPECTION.

1. Inspect DC CIRCUIT BREAKER switch for corrosion and obvious damage.

2. Inspect electrical wiring for cuts, crimps, bare wire, or other damage. Ensure connectors are securely attached.

3. Remove and replace any component that is damaged to the extent that it will effect the safe operation of the generator set.

C. INSTALLATION.

1. Mate DC CIRCUIT BREAKER switch (3, Figure 4-12) to rear of control panel (2). Secure using nut (4) and lockwasher (5).

2. Connect electrical wiring to the rear of DC CIRCUIT BREAKER switch (3).

3. Close control panel (2) and lock in place using quarter-turn fasteners (1).

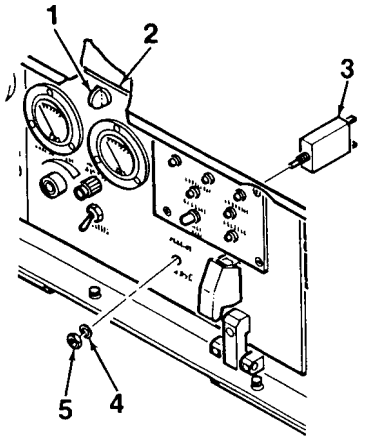

Figure 4-12. DC CIRCUIT BREAKER

4-22. CIRCUIT INTERRUPTER INDICATOR LIGHT MAINTENANCE

This task covers removal, inspection, and installation.

INITIAL SETUP

Tools:
Tool Kit, General Mechanic's Automotive (Item 2, App. B, Sect. III)
Soldering Iron (Item 6, App. B, Sect. III)
Heat Gun (Item 7, App. B, Sect. III)

Parts / Materials:
Solder (Item 12, App. E)
Heat Shrink Tubing (Item 13, App. E)

Equipment Condition:
Generator set shut down (Para. 2-9)
Battery cables disconnected
Cable disconnected for SLAVE RECEPTACLE

A. REMOVAL.

1. Turn quarter-turn fasteners (7, Figure 4-13) to unlock control panel (2).

2. Replace indicator light bulb (3) by removing cap (4) from CIRCUIT INTERRUPTER indicator light (5). Unscrew bulb (3) from light (5).

3. Peel back heat shrink tubing to expose electrical wires on rear of indicator light (5). Using a soldering iron, detach electrical wires from rear of indicator light.

4. Remove indicator light (5) from control panel (2) by removing attaching nut (6) and lockwasher (1).

B. INSPECTION.

1. Inspect indicator light for corrosion and obvious damage.

2. Inspect electrical wiring for cuts, crimps, bare wire, or other damage. Ensure connectors are securely attached.

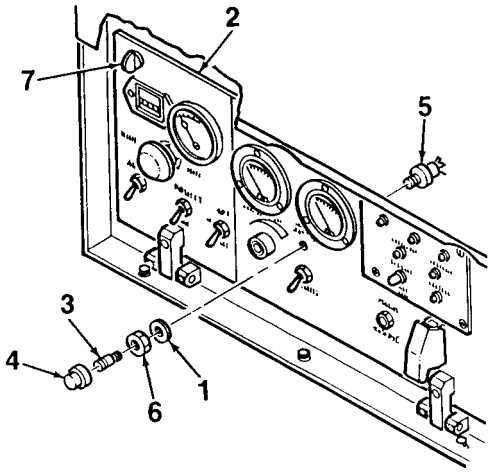

Figure 4-13. CIRCUIT INTERRUPTER Indicator Light (Sheet 1 of 2)

4-22. CIRCUIT INTERRUPTER INDICATOR LIGHT MAINTENANCE - cont.

3. Remove and replace any component that is damaged to the extent that it will effect the safe operation of the generator set.

C. INSTALLATION.

1. Install CIRCUIT INTERRUPTER indicator light (5, Figure 4-13) onto control panel (2) using attaching nut (6) and lockwasher (1).

CAUTION

Remove bulb (3) from indicator light (5) prior to soldering.

2. Connect electrical wiring to the rear of indicator light (5) and secure using soldering iron. Using a heat gun, adhere heat shrink tubing to wire connectors.

3. Screw indicator light bulb (3) into indicator light (5). Install cap (4).

4. Close control panel (2) and lock in place using quarter-turn fasteners (7).

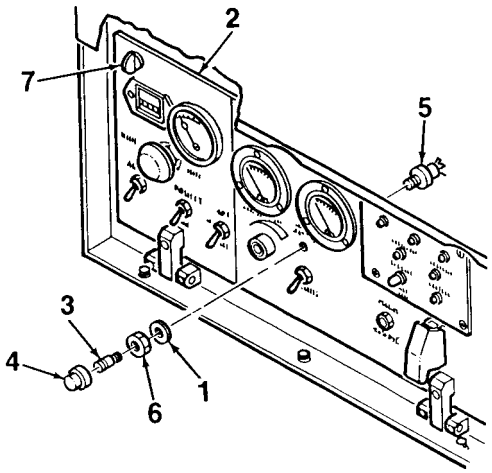

Figure 4-13. CIRCUIT INTERRUPTER Indicator Light (Sheet 2 of 2)

4-23. VOLTAGE ADJUST RHEOSTAT MAINTENANCE

This task covers removal, inspection, and installation.

INITIAL SETUP

Tools:
Tool Kit, General Mechanic's Automotive (Item 2, App. B, Sect. III)
Soldering Iron (Item 6, App. B, Sect. III)
Heat Gun (Item 7, App. B, Sect. III)

Parts / Materials:
Solder (Item 12, App. E)
Heat Shrink Tubing (Item 13, App. E)

Equipment Condition:
Generator set shut down (Para. 2-9)
Battery cables disconnected
Cable disconnected for SLAVE RECEPTACLE

A. REMOVAL.

1. Remove knob (4, Figure 4-14) from shaft of VOLTAGE ADJUST rheostat (3) by loosening setscrews (5).

2. Turn quarter-turn fasteners (1) to unlock and open control panel (2).

3. Remove rheostat (3) from control panel (2) by removing attaching nut (6) and lockwasher (7).

4. Peel back heat shrink tubing to expose electrical wires on rear of rheostat (3). Using a soldering iron, detach electrical wires from rear of rheostat.

B. INSPECTION.

1. Inspect rheostat for corrosion and obvious damage. Rotate rheostat shaft to ensure smooth operation.

2. Inspect electrical wiring for cuts, crimps, bare wire, or other damage. Ensure connectors are securely attached.

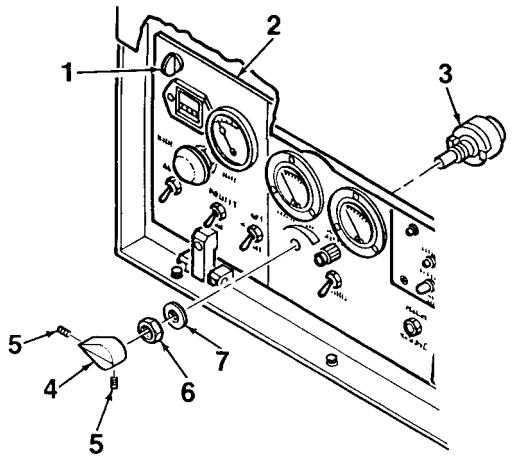

Figure 4-14. VOLTAGE ADJUST Rheostat

4-23. VOLTAGE ADJUST RHEOSTAT MAINTENANCE - cont.

3. Remove and replace any component that is damaged to the extent that it will effect the safe operation of the generator set.

C. INSTALLATION.

1. Connect electrical wiring to the rear of VOLTAGE ADJUST rheostat (3, Figure 4-14) and secure using soldering iron. Cover connection with heat shrink tubing and secure using heat gun.

2. Mate rheostat (3) to rear of control panel (2) and install using lockwasher (7) and nut (6).

3. Close control panel (2) and lock in place using quarter-turn fasteners (1).

4. Secure knob (4) to shaft of rheostat (3) by tightening setscrews (5).

4-24. CONTROL BOX RELAY MAINTENANCE

This task covers removal, inspection, and installation.

INITIAL SETUP

Tools:
Tool Kit, General Mechanic's Automotive (Item 2, App. B, Sect. III)

Equipment Condition:
Generator set shut down (Para. 2-9)
Battery cables disconnected
Cable disconnected for SLAVE RECEPTACLE

A. REMOVAL.

1. Turn quarter-turn fasteners to unlock and open control panel.

2. Remove holdown springs (4, Figure 4-15) to release relays (3) from relay sockets (1).

3. Tag and disconnect electrical wiring from fault lockout relay K12, auxiliary fuel transfer relay K14, and starter cutout relay K15.

NOTE

Note orientation of diode on relay socket (1) before removing socket. Socket must be oriented the same way when installed in order to function properly.

4. Remove relay sockets (1) from rear wall of control box by removing screws (2).

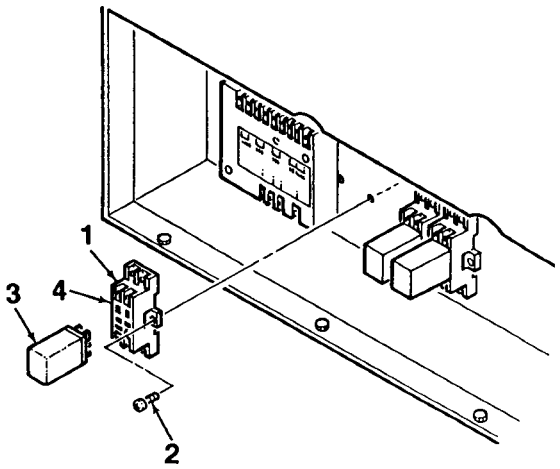

Figure 4-15. Control Box Relays

B. INSPECTION.

1. Inspect relays for corrosion, evidence of electrical short, and obvious damage. Ensure terminal lugs are intact and secure.

2. Inspect electrical wiring for cuts, crimps, bare wire, or other damage. Ensure connectors are securely attached.

3. Remove and replace any component that is damaged to the extent that it will effect the safe operation of the generator set.

4-24. CONTROL BOX RELAY MAINTENANCE - cont.

C. INSTALLATION.

1. Mate relay sockets (1, Figure 4-15) to rear wall of control box. Secure using screws (2) and nuts (3).
2. Connect electrical wiring to relays K12, K14, and K15.
3. Insert relays (3) into relay sockets (1). Secure using holdown springs (4).
4. Close control panel and lock in place using quarter-turn fasteners.

4-25. CONTROL BOX FUSE, DIODE, AND TERMINAL BLOCK MAINTENANCE

This task covers removal, inspection, and installation.

INITIAL SETUP

Tools:
Tool Kit, General Mechanic's Automotive (Item 2, App. B, Sect. III)

Equipment Condition:
Generator set shut down (Para. 2-9)
Battery cables disconnected
Cable disconnected for SLAVE RECEPTACLE

A. REMOVAL.

1. To remove fuse (15, Figure 4-16), turn quarter-turn fasteners to unlock and open control panel. Unscrew cap (16) from fuse holder (17) and remove fuse.

2. Tag and disconnect electrical wiring from terminal blocks TB5 (1) and TB3 (2).

3. Remove terminal blocks TB5 (1) and TB3 (2) from inside wall of control box by removing screw and captive washer assemblies (5).

4. Remove five diodes (6).

5. To remove terminal blocks TB4 (3) and TB6 (4), unlock main access cover latches and open cover.

6. Remove clear plastic covers (7, 8) from terminal blocks TB4 (3) and TB6 (4) by removing screws (9) and lockwashers (10).

7. Tag and disconnect electrical wiring from terminal blocks TB4 (3), and TB6 (4).

8. Remove terminal blocks TB4 (3) and TB6 (4) from rear of control box by removing standoffs (11) and lockwashers (12). Remove identification plates (13, 14).

9. Remove fuse holder (17) from control box by removing nut (18).

B. INSPECTION.

1. Inspect terminal blocks and diodes for corrosion, evidence of electrical short, and obvious damage. Ensure terminal connectors are intact and secure.

2. Inspect four diodes on terminal block TB5 for obvious damage. Check security of attachment.

3. Inspect electrical wiring for cuts, crimps, bare wire, or other damage. Ensure connectors are secure.

4. Remove and replace any component that is damaged to the extent that it will effect the safe operation of the generator set.

4-25. CONTROL BOX FUSE, DIODE, AND TERMINAL BLOCK MAINTENANCE - cont.

C. INSTALLATION.

1. Install fuse holder (17, Figure 4-16) onto control box using nut (18). Install fuse (15) and cap (16).

2. Mate terminal blocks TB4 (3) and TB6 (4), and identification plates (13, 14) to rear of control box. Secure using standoffs (11) and lockwashers (12).

3. Connect electrical wiring to terminal blocks TB4 (3) and TB6 (4). Install clear plastic covers (7, 8) using screws (9) and lockwashers (10).

4. Close main access cover and lock in place using latches.

5. Install diodes (6) onto terminal block TB5 (1).

6. Mate terminal blocks TB5 (1) and TB3 (2) to inside wall of control box. Secure using screw and captive washer assemblies (5).

7. Connect electrical wiring to terminal blocks TB5 (1) and TB3 (2).

8. Close control panel and lock in place using quarter-turn fasteners.

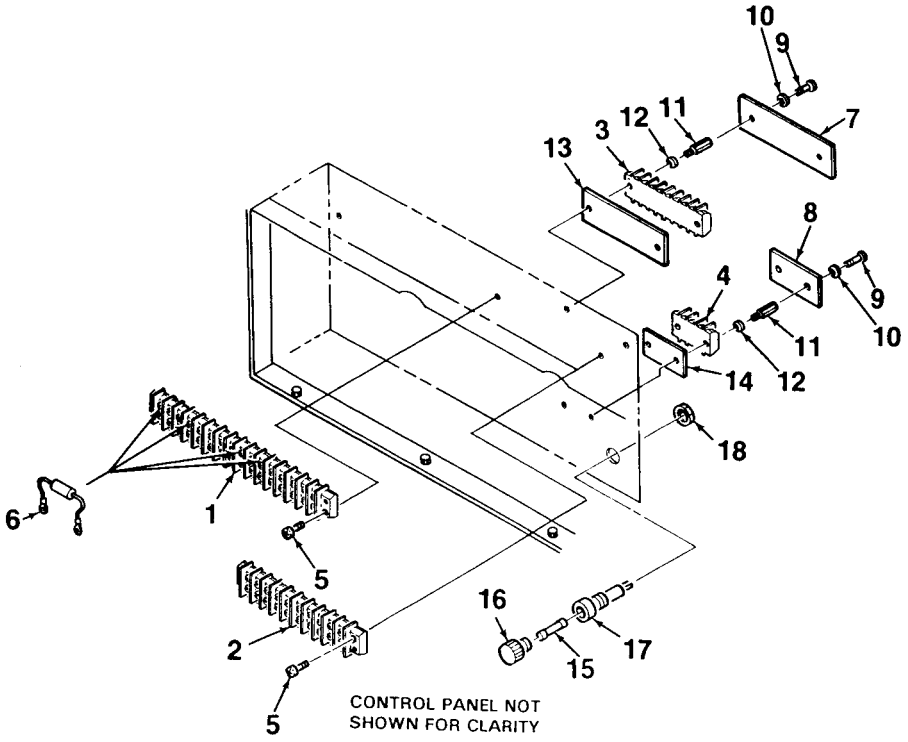

Figure 4-16. Terminal Blocks, Fuse, and Diodes

4-26. GOVERNOR CONTROL MAINTENANCE

This task covers removal, inspection, and installation.

INITIAL SETUP

Tools:
Tool Kit, General Mechanic's Automotive (Item 2, App. B, Sect. III)

Equipment Condition:
Generator set shut down (Para. 2-9)
Battery cables disconnected
Cable disconnected for SLAVE RECEPTACLE

A. REMOVAL.

1. Turn quarter-turn fasteners to unlock and open control panel.

2. Tag and disconnect electrical wiring from governor control (1, Figure 4-17).

3. Remove governor control (1) from inside wall of control box by removing screw and captive washer assemblies (2).

B. INSPECTION.

1. Inspect governor control for corrosion, evidence of electrical short, and obvious damage.

2. Inspect electrical wiring for cuts, crimps, bare wire, or other damage. Ensure connectors are securely attached.

3. Remove and replace any component that is damaged to the extent that it will effect the safe operation of the generator set.

C. INSTALLATION.

1. Mate governor control (1, Figure 4-17) to inside wall of control box. Secure using screws and captive washer assemblies (2).

2. Connect electrical wiring to governor control (1).

3. Close control panel and lock in place using quarter-turn fasteners.

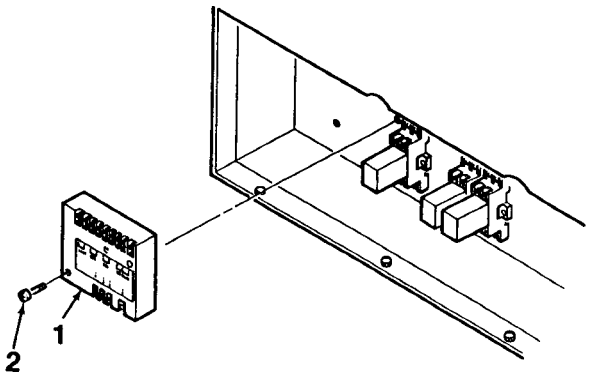

Figure 4-17. Governor Control

This page
intentionally
left blank

4-27. CONTROL BOX WIRING HARNESS MAINTENANCE

This task covers removal, inspection, and installation.

INITIAL SETUP

Tools:
Tool Kit, General Mechanic's Automotive (Item 2, App. B, Sect. III)

Equipment Condition:
Generator set shut down (Para. 2-9)
Battery cables disconnected
Cable disconnected for SLAVE RECEPTACLE

A. REMOVAL.

1. Unlock main access cover latches and lift cover to open.

2. Disconnect generator set wiring harness plug P7 from control box harness connector J7 (1, Figure 4-18), located on rear of control box assembly.

3. Unlock and open control panel (2) by turning quarter-turn fasteners (3).

4. Tag and disconnect control box harness wires from control box components. Refer to Figures FO-3, 60Hz Control Box Wiring Harness, and FO-4, 400 Hz Control Box Wiring Harness, for information.

5. Release harness connector J7 (1) from inside wall of control box by removing four screws with captive washers (5).

6. Remove clamp (6) by removing screw and captive washer assembly (7) and washer (8). Screw (7) secures panel cable to control box wall.

7. Remove clamp (9) from rear of control panel (2) by removing nut (10) and lockwasher (11). Remove control box wiring harness (4) from control box.

B. INSPECTION.

1. Inspect harness connector J7 (1) for corrosion, evidence of electrical short, and obvious damage. Check for bent, broken, or missing pins.

2. Inspect electrical wiring for cuts, crimps, bare wire, or other damage. Ensure connectors and terminal lugs are securely attached.

3. Conduct continuity check on suspect wires using a multimeter. Refer to Figures FO-3 and FO-4 for wiring diagrams and wire run lists.

4. Remove and replace any component that is damaged to the extent that it will effect the safe operation of the generator set.

4-27. CONTROL BOX WIRING HARNESS MAINTENANCE - cont.

C. INSTALLATION.

1. Mate control box harness connector J7 (1, Figure 4-18) to inside wall of control box. Secure using four screws with captive washers (5).

2. Connect control box harness wires to control box components. Refer to Figures FO-3, 60Hz Control Box Wiring Harness, and FO-4, 400 Hz Control Box Wiring Harness, for information.

3. Install clamp (6) using screw and captive washer assembly (7) and washer (8). Install clamp (0) using nut (10) and lockwasher (11).

4. Close control panel (2) and lock in place using quarter-turn fasteners (3).

5. Connect generator set wiring harness plug P7 to control box harness connector J7 (1).

6. Close main access cover and lock in place using latches.

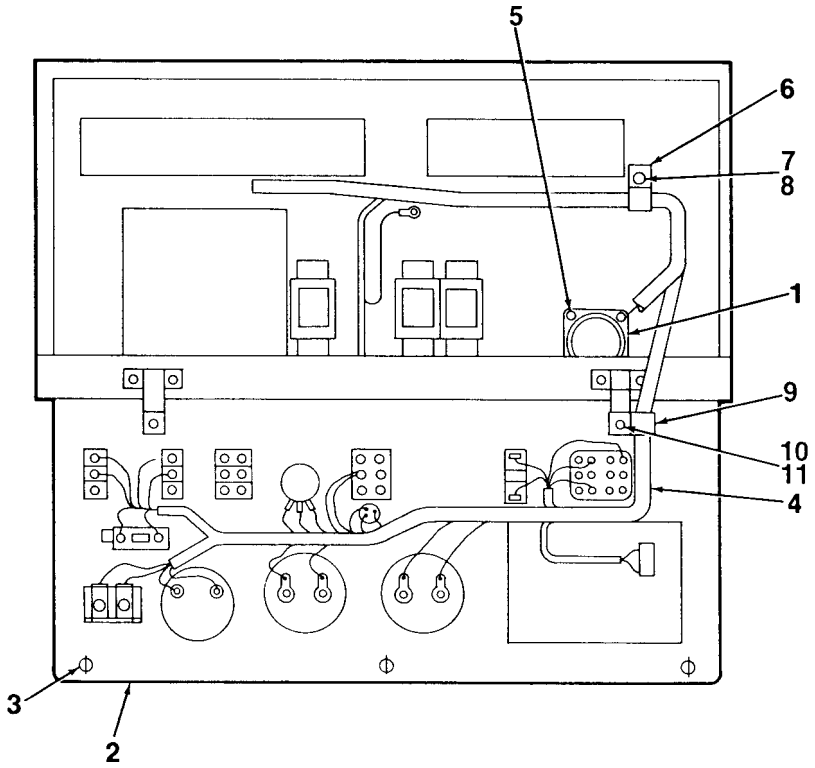

Figure 4-18. Control Box Wiring Harness

4-28. AC CIRCUIT INTERRUPTER CONTACTOR MAINTENANCE

This task covers removal, inspection, and installation.

INITIAL SETUP

Tools:
Tool Kit, General Mechanic's Automotive (Item 2, App. B, Sect. III)

Equipment Condition:
Generator set shut down (Para. 2-9)
Battery cables disconnected
Cable disconnected for SLAVE RECEPTACLE

A. REMOVAL.

1. Unlock main access cover latches and lift cover to open.

2. Remove protective plate (1, Figure 4-19) from bracket (9) by removing screws (2) and lockwashers (3).

3. Tag and disconnect electrical wiring from AC circuit interrupter contactor K1 (4).

4. Remove contactor K1 (4) and bracket (9) from back of control box by removing screw and captive washer assemblies (5) and washers (6).

5. Remove microswitch (8) from contactor K1 (4) by removing screw and captive washer assemblies (7).

B. INSPECTION.

1. Inspect contactor for corrosion, evidence of electrical short, and obvious damage.

2. Inspect electrical wiring for cuts, crimps, bare wire, or other damage. Ensure connectors are securely attached.

3. Remove and replace any component that is damaged to the extent that it will effect the safe operation of the generator set.

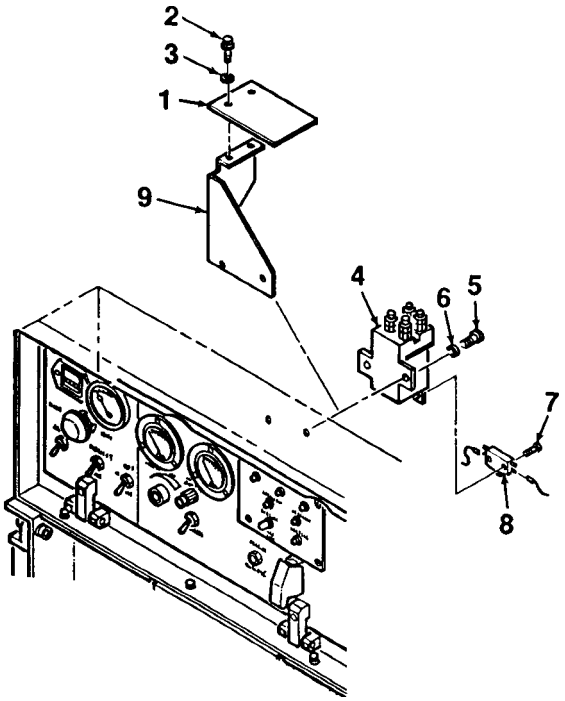

Figure 4-19. AC Circuit Interrupter Contactor

4-28. AC CIRCUIT INTERRUPTER CONTACTOR MAINTENANCE - cont.

C. INSTALLATION.

1. Install microswitch (8, Figure 4-19) onto AC circuit interrupter contactor K1 (4) using screw and captive washer assemblies (7).

2. Mate contactor K1 (4) and bracket (9) to back of control box. Secure using screw and captive washer assemblies (5) and washers (6).

3. Connect electrical wiring to contactor K1 (4).

4. Install protective plate (1) onto bracket (2) using screws (2) and lockwashers (3).

5. Close main access cover and lock in place using latches.

4-29. BATTERY CHARGING REGULATOR MAINTENANCE

This task covers removal, inspection, and installation.

INITIAL SETUP

Tools:
Tool Kit, General Mechanic's Automotive (Item 2, App. B, Sect. III)

Equipment Condition:
Generator set shut down (Para. 2-9)
Battery cables disconnected
Cable disconnected for SLAVE RECEPTACLE

A. REMOVAL.

1. Turn quarter-turn fasteners to unlock and open control panel.

2. Unlock main access cover latches and lift cover to open.

3. Disconnect electrical plug from battery charging regulator (1, Figure 4-20).

4. Remove battery charging regulator (1) from top of control box by removing screws (2), washers (3), and locknuts (4).

B. INSPECTION.

1. Inspect battery charging regulator for corrosion, evidence of electrical short, and obvious damage.

2. Inspect electrical wiring for cuts, crimps, bare wire, or other damage. Ensure terminal lugs are securely attached.

3. Remove and replace any component that is damaged to the extent that it will effect the safe operation of the generator set.

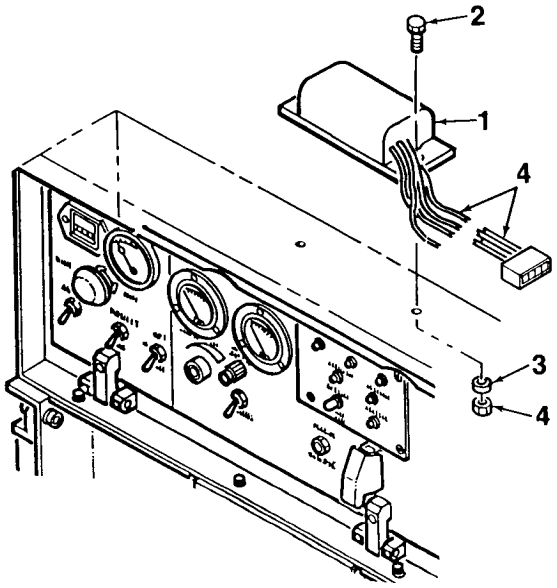

Figure 4-20. Battery Charging Regulator

4-29. BATTERY CHARGING REGULATOR MAINTENANCE - cont.

C. INSTALLATION.

1. Mate battery charging regulator (1, Figure 4-20) to top of control box. Secure using screws (2), washers (3), and locknuts (4).

2. Connect electrical plug to battery charging regulator (1).

3. Close main access cover and lock in place using latches.

4. Close control panel and lock in place using quarter-turn fasteners.

4-30. CONVENIENCE RECEPTACLE MAINTENANCE (60 HZ, MEP 831A ONLY)

This task covers removal, inspection, and installation.

INITIAL SETUP

Tools:
Tool Kit, General Mechanic's Automotive (Item 2, App. B, Sect. III)

Equipment Condition:
Generator set shut down (Para. 2-9)
Battery cables disconnected
Cable disconnected for SLAVE RECEPTACLE

A. REMOVAL.

1. Unlock main access cover latches and lift cover to open.

2. Remove screw (1, Figure 4-21) to disconnect receptacle cover (2) from convenience receptacle (3). Remove cover and rubber gasket (6) by removing four screw and captive washer assemblies (4).

CAUTION

Ensure wire leads on receptacle terminals are not damaged when pulling on receptacle.

3. Remove convenience receptacle (3) from control box by removing two screws (5).

4. Tag and disconnect electrical wiring from the rear of convenience receptacle (3).

B. INSPECTION.

1. Inspect convenience receptacle for corrosion, evidence of electrical short, and obvious damage. Check terminal connectors for damage.

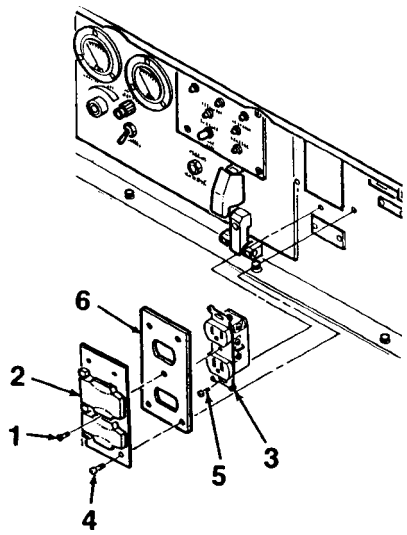

Figure 4-21. Convenience Receptacle

4-30. CONVENIENCE RECEPTACLE MAINTENANCE (60 HZ, MEP 831A ONLY) - cont.

2. Inspect electrical wiring for cuts, crimps, bare wire, or other damage. Ensure connectors are securely attached.

3. Remove and replace any component that is damaged to the extent that it will effect the safe operation of the generator set.

C. INSTALLATION.

1. Connect electrical wiring to convenience receptacle (3, Figure 4-21).

2. Mate convenience receptacle (3) to control box and secure using two screws (5)

3. Mate cover (2) and rubber gasket (6) to control box and secure using four screw and captive washer assemblies (4). Install screw (1).

4. Close main access cover and lock in place using latches.

4-31. GROUND FAULT CIRCUIT INTERRUPTER MAINTENANCE (60 HZ, MEP 831A ONLY)

This task covers removal, inspection, and installation.

INITIAL SETUP

Tools:
Tool Kit, General Mechanic's Automotive (Item 2, App. B, Sect. III)

Equipment Condition:
Convenience receptacle removed (Para. 4-30)
Cover removed from TB4 (Para. 4-25)

A. REMOVAL.

1. Unlock main access cover latches and lift cover to open.

2. Tag and disconnect ground fault circuit interrupter (1, Figure 4-22) wiring from terminal block TB4.

3. Remove ground fault circuit interrupter (1) from control box by removing screws (2), washers (3), and nuts (4).

B. INSPECTION.

1. Inspect ground fault circuit interrupter for corrosion, evidence of electrical short, and obvious damage. Depress RESET and TEST buttons to ensure smooth operation.

2. Inspect electrical wiring for cuts, crimps, bare wire, or other damage. Ensure connectors are securely attached.

3. Remove and replace any component that is damaged to the extent that it will effect the safe operation of the generator set.

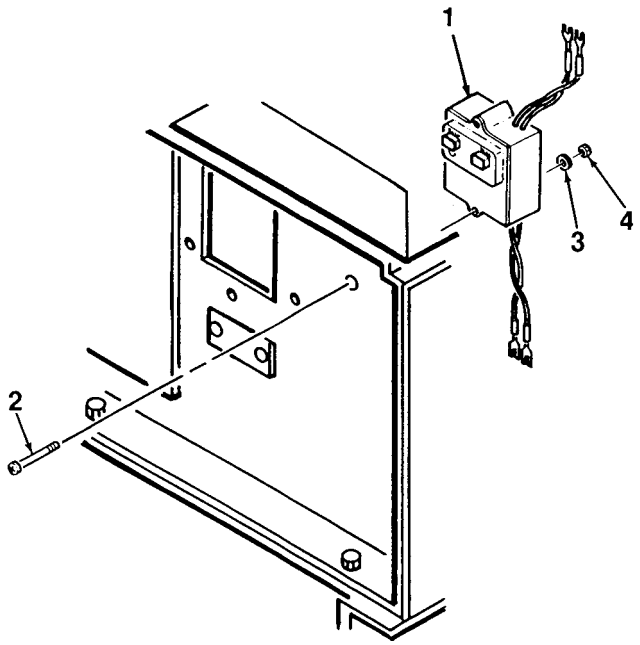

Figure 4-22. Ground Fault Circuit Interrupter

4-31. GROUND FAULT CIRCUIT INTERRUPTER MAINTENANCE (60 HZ, MEP 831A ONLY) - cont.

C. INSTALLATION.

1. Mate ground fault circuit interrupter (1, Figure 4-22) to back of control box. Secure using screws (2), washers (3), and nuts (4).

2. Connect ground fault circuit interrupter (1) electrical wiring to terminal board TB4. Install cover onto TB4 (Para. 4-25).

3. Install battery and tray (Para. 4-45). Install convenience receptacle (Para. 4-30).

4. Close main access cover and lock in place using latches.

4-32. SLAVE RECEPTACLE MAINTENANCE

This task covers removal, inspection, and installation.

INITIAL SETUP

Tools:
Tool Kit, General Mechanic's Automotive (Item 2, App. B, Sect. III)

Equipment Condition:
Battery removed (Para. 4-44)

A. REMOVAL.

1. Unlock main access cover latches and lift cover to open.

2. Tag and disconnect electrical wiring from the rear of SLAVE RECEPTACLE (1, Figure 4-23).

4. Remove SLAVE RECEPTACLE (1) and attached cap from generator set skid base by removing screws (2), washers (3), and nuts (4).

B. INSPECTION.

1. Inspect receptacle for corrosion, evidence of electrical short, and obvious damage. Check terminal connectors for damage.

2. Inspect electrical wiring for cuts, crimps, bare wire, or other damage. Ensure terminal lugs are securely attached.

3. Remove and replace any component that is damaged to the extent that it will effect the safe operation of the generator set.

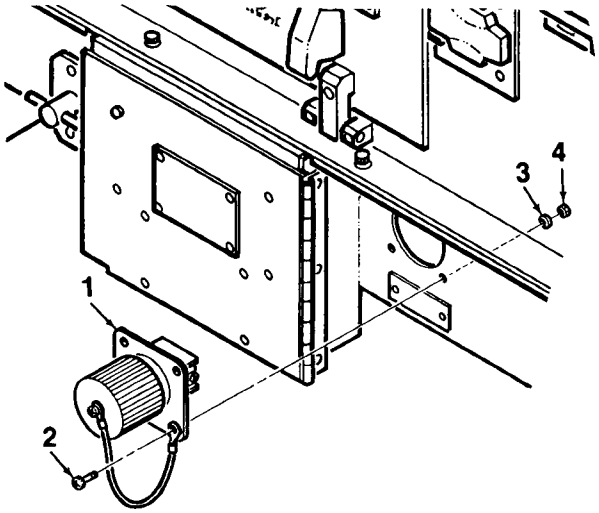

Figure 4-23. SLAVE RECEPTACLE

4-32. SLAVE RECEPTACLE MAINTENANCE - cont.

C. INSTALLATION.

1. Mate SLAVE RECEPTACLE (1, Figure 4-23) and attached cap to skid base. Secure using screws (2), washers (3), and nuts (4).

2. Connect electrical wiring to rear of SLAVE RECEPTACLE (1).

3. Install battery (Para. 4-44).

4. Close main access cover and lock in place using latches.

4-33. OUTPUT TERMINALS AND EMI FILTER MAINTENANCE

This task covers removal, inspection, and installation.

INITIAL SETUP

Tools:
Tool Kit, General Mechanic's Automotive (Item 2, App. B, Sect. III)

Equipment Condition:
Generator set shut down (Para. 2-9)
Battery cables disconnected
Cable disconnected for SLAVE RECEPTACLE

A. REMOVAL.

1. Unlock generator set enclosure cover latches and lift cover to open.

2. Turn lock (2, Figure 4-24) and open output panel cover (1).

3. Disconnect load and ground wires from load terminals using load wrench (3).

4. Release load wrench (3) lanyard from output box by removing screw (4), washer (5), and locknut (6). Remove lanyard from wrench only if replacement is required.

5. Tag and disconnect EMI filter (9) electrical connectors. Remove EMI filter from load and ground terminals (10, 11) by removing four nuts (7) and washers (8).

6. Remove load board (15) from generator set skid base by removing four screws (16), washers (17), and locknuts (18).

7. Remove load terminals (10) by removing nuts (12) and washers (13). Remove ground terminal (11) by removing nut (14) and washers (13).

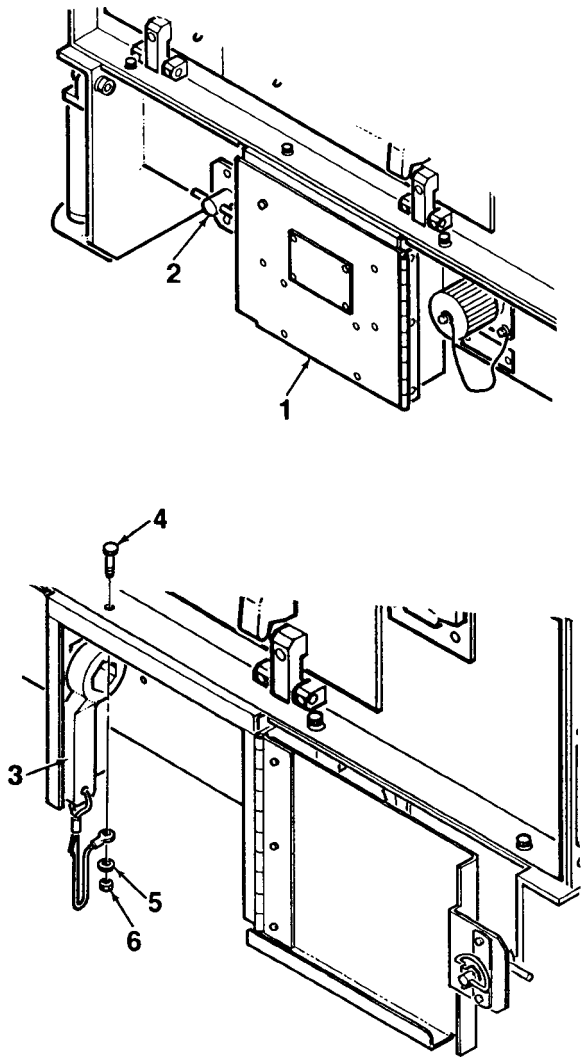

Figure 4-24. Output Terminals / Filter (Sheet 1 of 4)

4-33. OUTPUT TERMINALS AND EMI FILTER MAINTENANCE - cont.

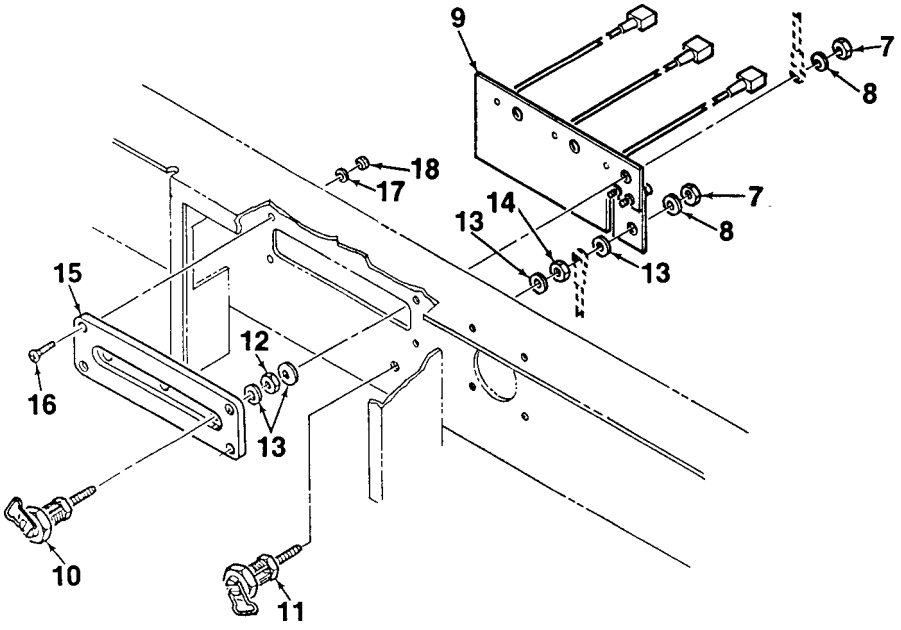

Figure 4-24. Output Terminals / Filter
(Sheet 2 of 4)

B. INSPECTION.

1. Inspect load and ground terminals for corrosion, evidence of electrical short, and obvious damage. Check for crossed, stripped, or flattened threads.

2. Inspect EMI filter for obvious damage. Inspect electrical wiring for cuts, abrasions, or bare wire. Ensure connectors are securely fastened.

3. Inspect output panel cover for dents, cracks, or other damage. Check security of attachment. Ensure cover lock operates smoothly, free of binding.

4. Remove and replace any component that is damaged to the extent that it will effect the safe operation of the generator set.

4-33. OUTPUT TERMINALS AND EMI FILTER MAINTENANCE - cont.

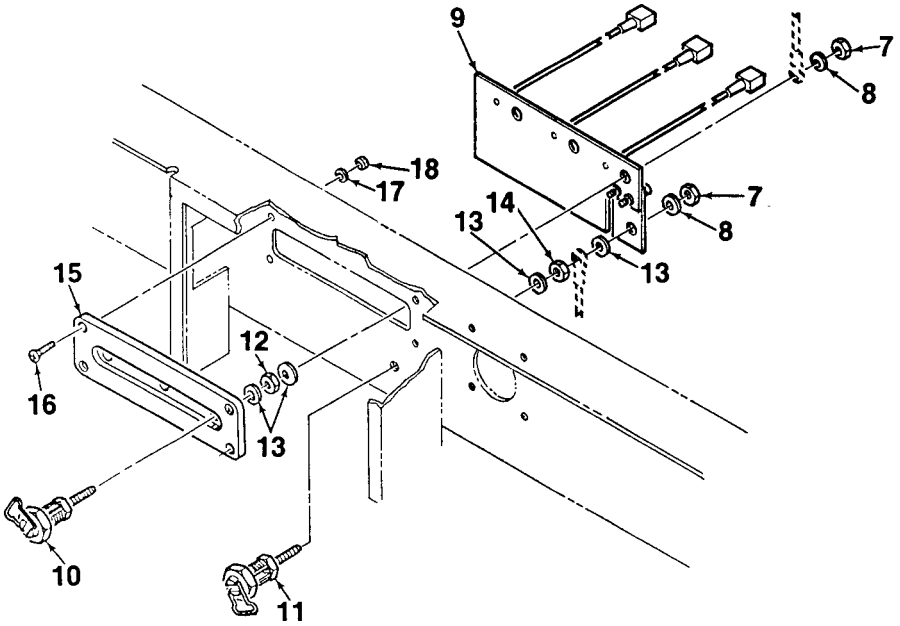

Figure 4-24. Output Terminals / Filter
(Sheet 3 of 4)

C. INSTALLATION.

1. Install load terminals (10, Figure 4-24) using nuts (12) and washers (13). Install ground terminal (11, lower right hand hole) using nut (14) and washers (13).

2. Mate load board (15) to generator set skid base. Secure using four screws (16), washers (17), and locknuts (18).

3. Install EMI filter (9) onto load and ground terminals (10, 11). Secure using four nuts (7) and washers (8). Connect EMI filter connectors.

4. Connect electrical cables to load and ground terminals (10, 11) using load wrench. Neutral terminal is upper right. Ground terminal is lower right.

4-33. OUTPUT TERMINALS AND EMI FILTER MAINTENANCE - cont.

5. Attach load wrench (3, Figure 4-23) lanyard to output box using screw (4), washer (5), and nut (6).

6. Close output panel cover (1) and engage lock (2).

7. Close main access cover and lock in place using latches.

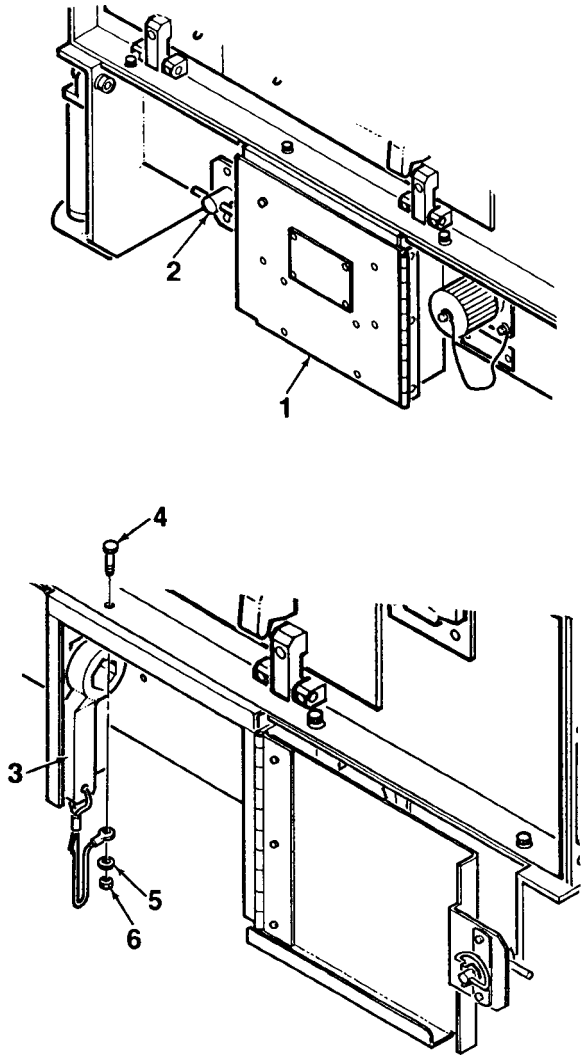

Figure 4-24. Output Terminals / Filter (Sheet 4 of 4)

4-34. VOLTAGE RESISTOR MAINTENANCE

This task covers removal, inspection, and installation.

INITIAL SETUP

Tools:
Tool Kit, General Mechanic's Automotive (Item 2, App. B, Sect. III)

Equipment Condition:
Generator set shut down (Para. 2-9)
Battery cables disconnected
Cable disconnected for SLAVE RECEPTACLE

A. REMOVAL.

1. Unlock main access cover latches and lift cover to open.

2. Turn lock (2, Figure 4-25) and open output panel cover (1).

3. Disconnect electrical wiring from the rear of three voltage resistors (3).

4. Remove three voltage resistors (3) from the back of the output box by removing screws (4), washers (5), and locknuts (6).

B. INSPECTION.

1. Inspect voltage resistors for corrosion, evidence of electrical short, and obvious damage.

2. Inspect electrical wiring for cuts, crimps, bare wire, or other damage. Ensure terminal lugs are securely attached.

3. Remove and replace any component that is damaged to the extent that it will effect the safe operation of the generator set.

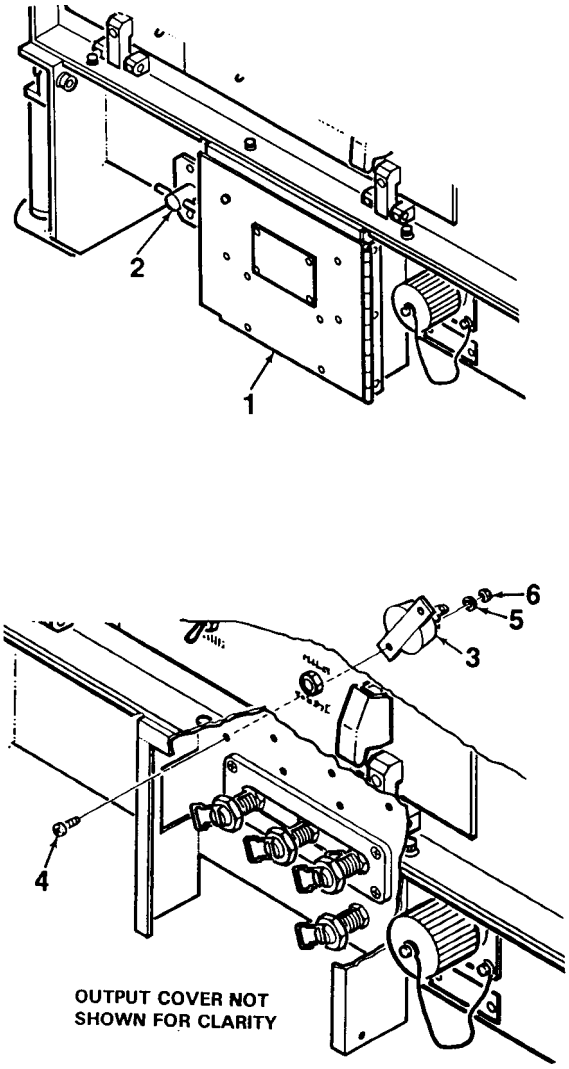

Figure 4-25. Voltage Resistors

4-34. VOLTAGE RESISTOR MAINTENANCE - cont.

C. INSTALLATION.

1. Mate three voltage resistors (3, Figure 4-25) to back of output box. Secure using screws (4), washers (5), and locknuts (6).

2. Connect electrical wiring to voltage resistors (3).

3. Close output panel cover (1) and engage lock (2).

4. Close main access cover and lock in place using latches.

4-35. LIFTING HANDLE MAINTENANCE

This task covers removal, inspection, and installation.

INITIAL SETUP

Tools:
Tool Kit, General Mechanic's Automotive (Item 2, App. B, Sect. III)

Equipment Condition:
Generator set shut down (Para. 2-9)

A. REMOVAL.

1. Remove lifting handle (1, Figure 4-26) from generator set skid base by removing screw (2), washers (3, 4), and locknut (5).

2. Unlock main access cover latches and lift cover to open.

3. Remove lifting handle (6) from skid base by removing two screws (7), washers (8), locknuts (9), and three screws (10), washers (11), and locknuts (12).

B. INSPECTION.

Inspect lifting handles for corrosion and obvious damage. Inspect lifting handle bracket for cracks or deformation. Replace handle if damaged.

C. INSTALLATION.

1. Install lifting handle (6, Figure 4-26) onto skid base using two screws (7), washers (8), locknuts (9), and three screws (10), washers (11), and locknuts (12).

2. Install lifting handle (1) onto skid base using screw (2), washers (3, 4), and locknut (5).

3. Close main access cover and lock in place using latches.

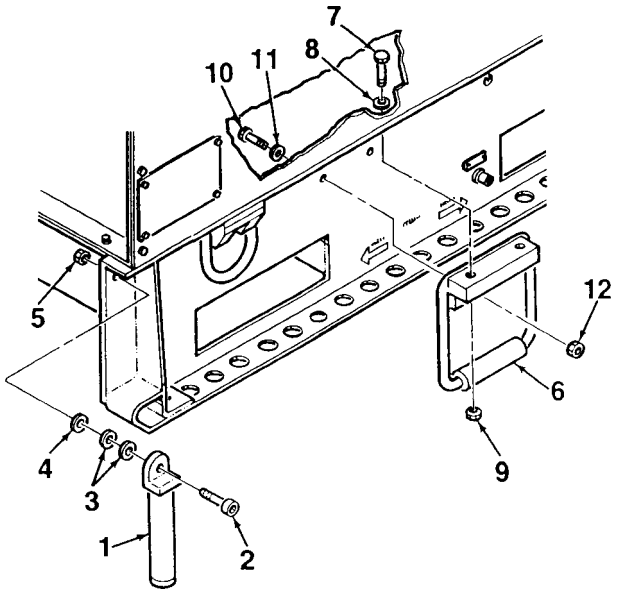

Figure 4-26. Lifting Handles

This page
intentionally
left blank

4-36. ENGINE OIL DRAIN ASSEMBLY MAINTENANCE

This task covers removal, inspection, and installation.

INITIAL SETUP

Tools:
Tool Kit, General Mechanic's Automotive (Item 2, App. B, Sect. III)

Equipment Condition:
Generator set shut down (Para. 2-9)
Battery cables disconnected
Cable disconnected for SLAVE RECEPTACLE

A. REMOVAL.

1. Confirm that drain valve (4, Figure 4-27) is closed (valve handle perpendicular to valve).

2. Disconnect hose (1) from drain valve (4) and adapter (5) loosening hose clamps (3). Remove adapter (5) from elbow (2).

NOTE

Nut on outside of skid base, adjacent to plug, is welded in place and not removable.

3. Unscrew plug (8) from elbow (2). Release chain (9) from skid base by removing screw (10), washers (11), and locknut (12). Remove chain (9) from plug only if replacement is required.

4. Remove elbow (2) from skid base by removing nut (6) and star washer (7).

5. If removal of drain valve (4) is required, engine must be removed from generator set. Refer to Direct Support maintenance level.

B. INSPECTION.

1. Inspect oil drain hose for cuts, cracks, deterioration, or other damage. Inspect for evidence of leakage.

2. Inspect drain valve for clogging or obstruction. Ensure valve handle operates smoothly and that valve shuts completely.

3. Inspect elbow, fitting, and plug for damage. Inspect for crossed, stripped, or damaged threads.

4. Remove and replace any component that is damaged to the extent that it will effect the safe operation of the generator set.

4-36. ENGINE OIL DRAIN ASSEMBLY MAINTENANCE - cont.

C. INSTALLATION.

1. Install elbow (2, Figure 4-27) into skid base and secure using nut (6) and star washer (7). Install plug (8) and secure chain (9) to skid base using screw (10), washers (11), and locknut (12).

2. Install adapter (5) onto elbow (2).

3. Connect hose (1) to drain valve (4) and adapter (5) and tighten hose clamps (3).

4. Close drain valve (4) by turning handle perpendicular to valve.

5. Service engine oil (Para. 4-1).

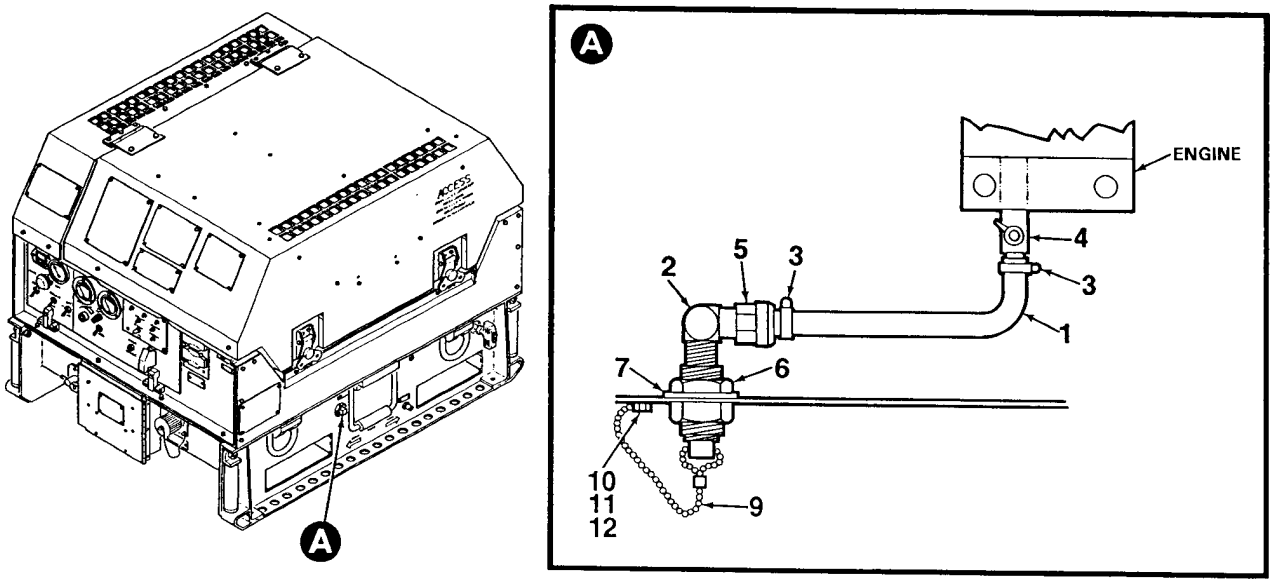

Figure 4-27. Engine Oil Drain Assembly

4-37. ENGINE TEMPERATURE SWITCH MAINTENANCE

This task covers removal, inspection, and installation.

INITIAL SETUP

Tools:
Tool Kit, General Mechanic's Automotive (Item 2, App. B, Sect. III)

Parts / Materials:
Teflon Tape (Item 19 App. E)

Equipment Condition:
Generator set shut down (Para. 2-9)
Battery cables disconnected
Cable disconnected for SLAVE RECEPTACLE
Engine oil drained (Para. 4-1)

A. REMOVAL.

1. Disconnect electrical plug (1, Figure 4-28) from engine temperature switch (2).

2. Using a 1-inch open end wrench, remove engine temperature switch (2) from engine crankcase.

B. INSPECTION.

1. Inspect engine temperature switch for corrosion, evidence of electrical short, and obvious damage.

2. Inspect electrical wiring for cuts, crimps, bare wire, or other damage. Ensure plug is securely attached.

3. Remove and replace any component that is damaged to the extent that it will effect the safe operation of the generator set.

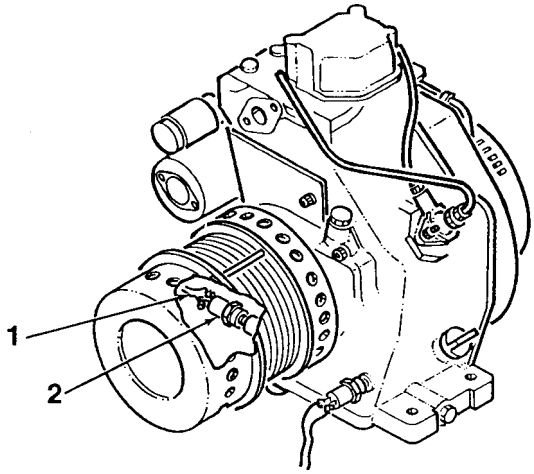

Figure 4-28. Engine Temperature Switch

4-37. ENGINE TEMPERATURE SWITCH MAINTENANCE - cont.

C. INSTALLATION.

CAUTION

Temperature switch (2) is fragile. Do not overtighten. Apply light pressure while tightening to prevent switch from breaking off in engine.

1. Apply teflon tape to the threads of engine temperature switch (2, Figure 4-28). Install switch into engine crankcase.

2. Connect electrical plug (1) to engine temperature switch (2).

3. Service engine oil (Para. 4-1).

4-38. LUBRICATION OIL PRESSURE SWITCH MAINTENANCE

This task covers removal, inspection, and installation.

INITIAL SETUP

Tools:
Tool Kit, General Mechanic's Automotive (Item 2, App. B, Sect. III)

Parts / Materials:
Teflon Tape (Item 19 App. E)

Equipment Condition:
Generator set shut down (Para. 2-9)
Battery cables disconnected
Cable disconnected for SLAVE RECEPTACLE

A. REMOVAL.

1. It is not necessary to drain oil if a suitable plug is used to plug port when lubrication oil pressure switch (2, Figure 4-29) is removed. If required, drain oil (Para. 4-1).

2. Tag and disconnect electrical wires (1) from pressure switch (2).

3. Remove lubrication oil pressure switch (2) from engine crankcase.

B. INSPECTION.

1. Inspect pressure switch for corrosion, evidence of electrical short, and obvious damage.

2. Inspect electrical wiring for cuts, crimps, bare wire, or other damage.

3. Remove and replace any component that is damaged to the extent that it will effect the safe operation of the generator set.

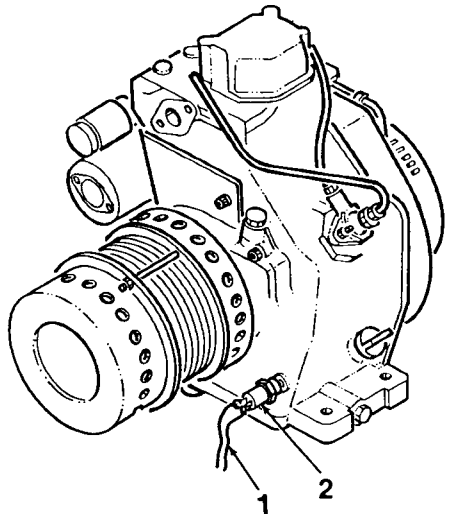

Figure 4-29. Lubrication Oil Pressure Switch

4-38. LUBRICATION OIL PRESSURE SWITCH MAINTENANCE - cont.

C. INSTALLATION.

CAUTION

Pressure switch (2) is fragile. Do not overtighten. Apply light pressure while tightening to prevent switch from breaking off in engine.

1. Apply teflon tape to the threads of lubrication oil pressure switch (2, Figure 4-29). Install switch into engine crankcase.

2. Connect electrical wires (1) to pressure switch (2).

3. Service engine oil (Para. 4-1) as required.

4-39. FUEL LEVEL SWITCH ASSEMBLY MAINTENANCE

This task covers removal, inspection, and installation.

INITIAL SETUP

Tools:
Tool Kit, General Mechanic's Automotive (Item 2, App. B, Sect. III)

Equipment Condition:
Generator set shut down (Para. 2-9)
Battery cables disconnected
Cable disconnected for SLAVE RECEPTACLE

A. REMOVAL.

1. Unlock main access cover latches and lift cover to open.

NOTE

Note position of level switch (4) and gasket (7) prior to removing from fuel tank (6).

2. Disconnect level switch electrical plugs (5, Figure 4-30).

3. Remove five screws (1), lockwashers (2), and washers (3) from level switch (4). Remove switch and gasket (7) from fuel tank (6).

B. INSPECTION.

1. Inspect fuel level switch for corrosion and obvious damage.

2. Inspect electrical wiring for cuts, crimps, bare wire, or other damage. Ensure plug is securely attached.

3. Remove and replace any component that is damaged to the extent that it will effect the safe operation of the generator set.

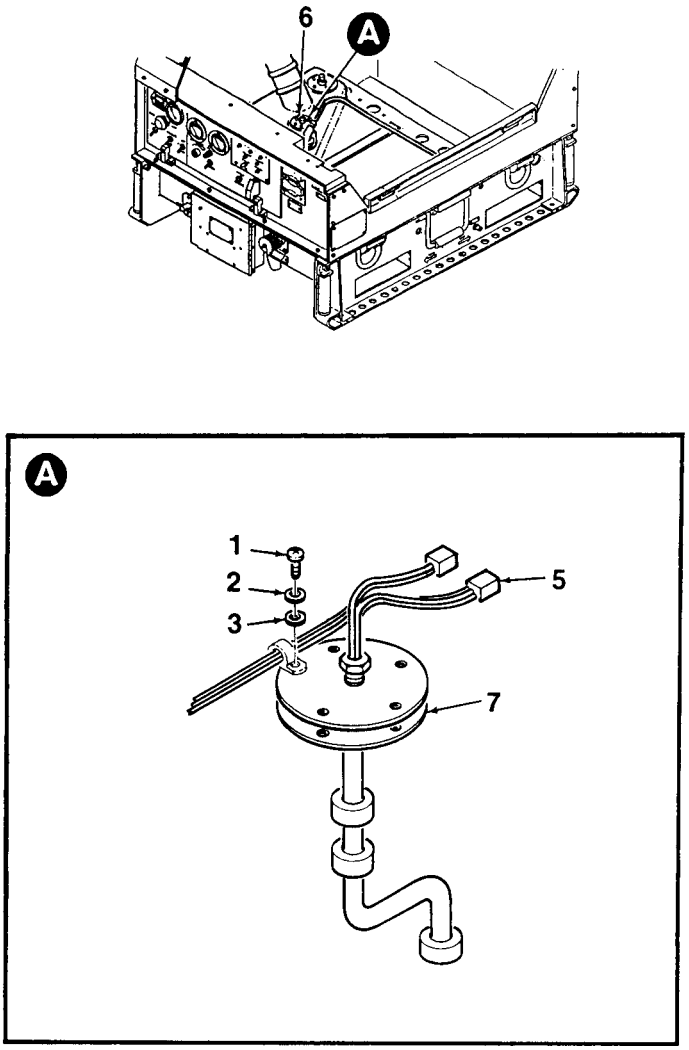

Figure 4-30. Fuel Level Switch

4-39. FUEL LEVEL SWITCH ASSEMBLY MAINTENANCE - cont.

C. INSTALLATION.

1. Align mounting holes on level switch (4, Figure 4-30) with holes in gasket (7) prior to mounting into fuel tank (6).

2. Install level switch (4) and gasket (7) into fuel tank (6). Secure using five screws (1), lockwashers (2), and washers (3).

3. Connect level switch electrical plugs (5).

4. Close main access cover and lock in place.

4-40. FUEL SENDER MAINTENANCE

This task covers removal, inspection, and installation.

INITIAL SETUP

Tools:
Tool Kit, General Mechanic's Automotive (Item 2, App. B, Sect. III)

Equipment Condition:
Generator set shut down (Para. 2-9)
Battery cables disconnected
Cable disconnected for SLAVE RECEPTACLE

A. REMOVAL.

1. Unlock main access cover latches and lift cover to open.

NOTE

Note position of fuel sender (2) and gasket (10) prior to removing from fuel tank (5).

2. Tag and disconnect electrical wire (1, Figure 4-31) from fuel sender (2) by removing captive nut and washer (3) from stud (4) on sender.

3. Remove fuel sender (2) and gasket (10) from fuel tank (5) by removing five screws (6), lockwashers (7), and washers (8). Remove remaining wires (9).

B. INSPECTION.

1. Inspect sender for corrosion and obvious damage.

2. Inspect electrical wiring for cuts, crimps, bare wire, or other damage.

3. Remove and replace any component that is damaged to the extent that it will effect the safe operation of the generator set.

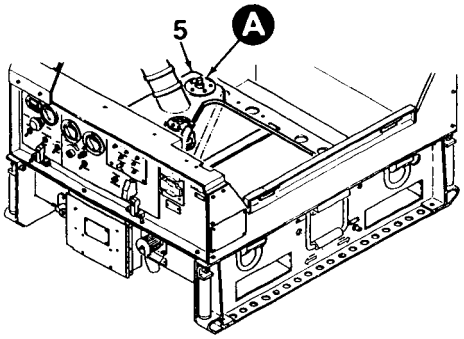

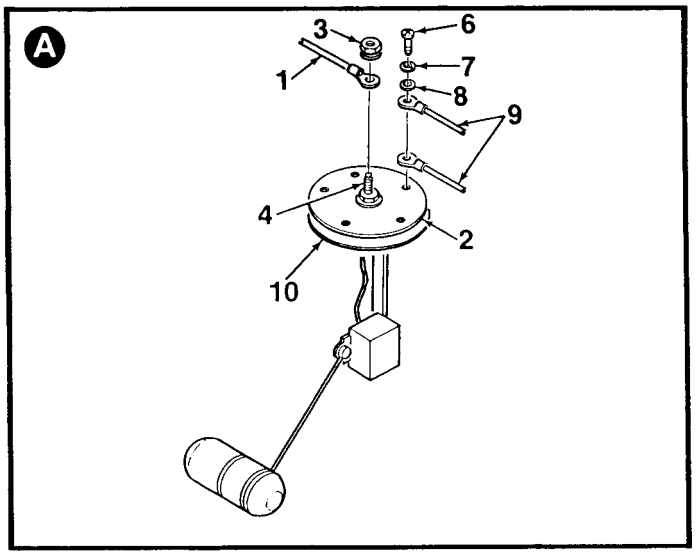

Figure 4-31. Fuel Sender

4-40. FUEL SENDER MAINTENANCE - cont.

C. INSTALLATION.

1. Align mounting holes on fuel sender (2, Figure 4-31) with holes in gasket (10) prior to mounting into fuel tank (5).

2. Install fuel sender (2) and gasket (10) onto fuel tank (5). Secure sender and wire (9) using five screws (6), lockwashers (7), and washers (8).

3. Connect electrical wire (1) to stud (4) on sender using nut and captive washer (3).

4. Close main access cover and lock in place.

4-41. FUEL TANK PICKUP TUBE MAINTENANCE

This task covers removal, inspection, and installation.

INITIAL SETUP

Tools:
Tool Kit, General Mechanic's Automotive (Item 2, App. B, Sect. III)

Equipment Condition:
Generator set shut down (Para. 2-9)
Battery cables disconnected
Cable disconnected for SLAVE RECEPTACLE

A. REMOVAL.

1. Unlock main access cover latches and lift cover to open.

2. Disconnect hose (1, Figure 4-32) from elbow (2).

3. Remove fuel tank pickup tube (3) and gasket (8) from fuel tank (4) by removing three screws (5), lockwashers (6), and washers (7).

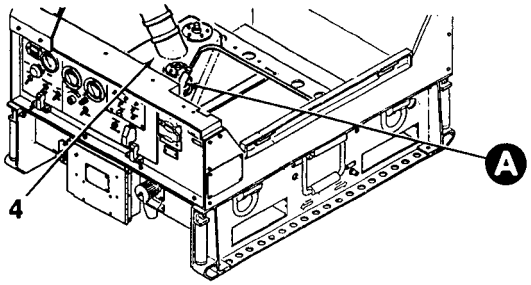

B. INSPECTION.

1. Inspect pickup tube for corrosion and obvious damage.

2. Inspect fuel hose for cuts, cracks, deterioration, or other damage. Check for evidence of leakage. Inspect for crossed, stripped, or damaged threads.

3. Remove and replace any component that is damaged to the extent that it will effect the safe operation of the generator set.

C. INSTALLATION.

1. Install fuel tank pickup tube (3, Figure 4-32) and gasket (10) onto fuel tank (4). Secure using three screws (5), lockwashers (6), and washers (7).

2. Connect hose (1) to elbow (2).

3. Close main access cover and lock in place.

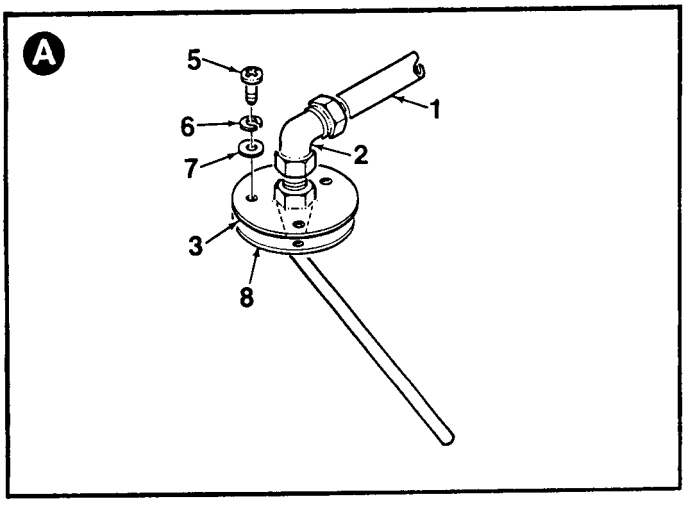

Figure 4-32. Fuel Tank Pickup Tube

4-42. PRIMARY FUEL PUMP MAINTENANCE

This task covers removal, inspection, and installation.

INITIAL SETUP

Tools:
Tool Kit, General Mechanic's Automotive (Item 2, App. B, Sect. III)

Parts / Materials:
Teflon Tape (Item 19, App. E)

Equipment Condition:
Generator set shut down (Para. 2-9)
Battery cables disconnected
Cable disconnected for SLAVE RECEPTACLE

A. REMOVAL.

1. Unlock main access cover latches and lift cover to open.

2. Disconnect fuel pump electrical plug (7, Figure 4-33).

3. Disconnect fuel hose (1) from fuel filter (2) by loosening clamp (3). Remove filter from fuel pump (11).

4. Disconnect fuel hose (4) from fitting (6) by loosening clamp (5). Remove fitting (6) from fuel pump (11).

5. Remove fuel pump (11) from enclosure wall by removing two screws (8), lockwashers (9), and washers (10).

B. INSPECTION.

1. Inspect fuel pump for cracks, corrosion, evidence of leakage, and obvious damage.

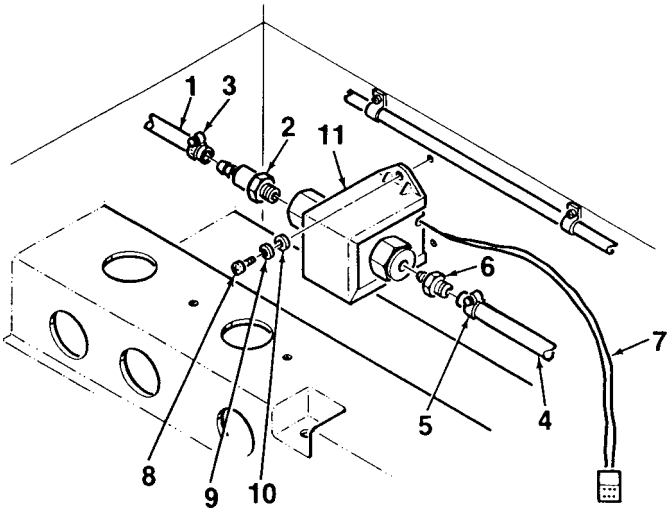

Figure 4-33. Primary Fuel Pump (Sheet 1 of 2)

4-42. PRIMARY FUEL PUMP MAINTENANCE - cont.

2. Inspect electrical wiring for cuts, crimps, bare wire, or other damage. Ensure terminal lugs are securely attached.

3. Remove and replace any component that is damaged to the extent that it will effect the safe operation of the generator set.

C. INSTALLATION.

1. Apply teflon tape to the threads of fuel filter (2, Figure 4-33) and fitting (6). Install filter and fitting onto fuel pump (11).

2. Mate fuel pump (11) to wall of enclosure. Secure using two screws (8), lockwashers (9), and washers (10).

3. Connect fuel hoses (1) to fuel filter (2) and fitting (6). Tighten clamps (3).

4. Connect fuel pump electrical plug (7).

5. Close main access cover and lock in place using latches.

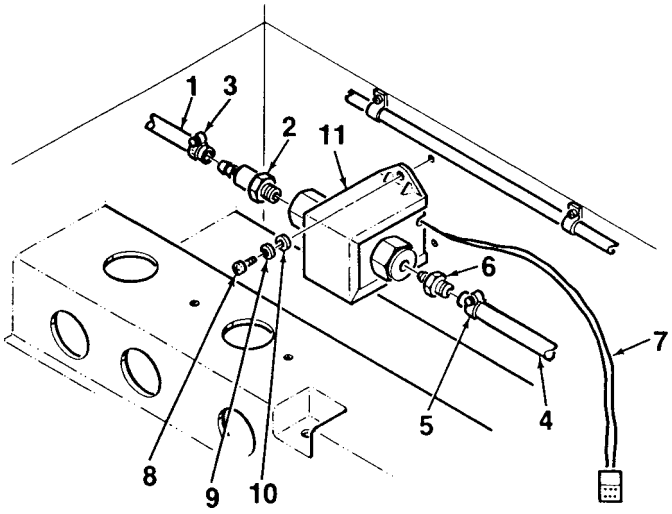

Figure 4-33. Primary Fuel Pump (Sheet 2 of 2)

This page
Intentionally
Left blank

4-43. MUFFLER ASSEMBLY MAINTENANCE

This task covers removal, inspection, and installation.

INITIAL SETUP

Tools:
Tool Kit, General Mechanic's Automotive (Item 2, App. B, Sect. III)

Equipment Condition:
Generator set shut down (Para. 2-9) and cool
Battery cables disconnected
Cable disconnected for SLAVE RECEPTACLE

A. REMOVAL.

1. Unlock main access cover latches and lift cover to open.

2. Remove access plate (1, Figure 4-34) from left side panel (2) by removing six screws (3), lockwashers (4), and washers (5).

3. Remove deflector panel (6) from left side panel (2) by removing four screws (7), lockwashers (8), and washers (9).

4. Remove mounting plate (10) from left side panel (2) by removing four screws (11), lockwashers (12), and washers (13).

5. Remove thermal wrap (14) from muffler (27) by removing lockwire. Remove two nuts (15) from cylinder head studs (16).

6. Remove four screws (17), lockwashers (18), and washers (19). Remove bellows (20) and gasket (21) from flange (22).

7. Remove two screws (23), lockwashers (24), washers (25), muffler (27), and gasket (26) from engine block.

8. Remove flange (22) from muffler (27) by removing three screws (28), lockwashers (29), and nuts (30).

9. Remove thermal wrap (31) and thermal blanket (32) from muffler (27) by removing lockwire.

10. Remove bellows (20), flange (33), and gasket (37) from duct (38) by removing screws (34), lockwashers (35), and washers (36).

4-43. MUFFLER ASSEMBLY MAINTENANCE - cont.

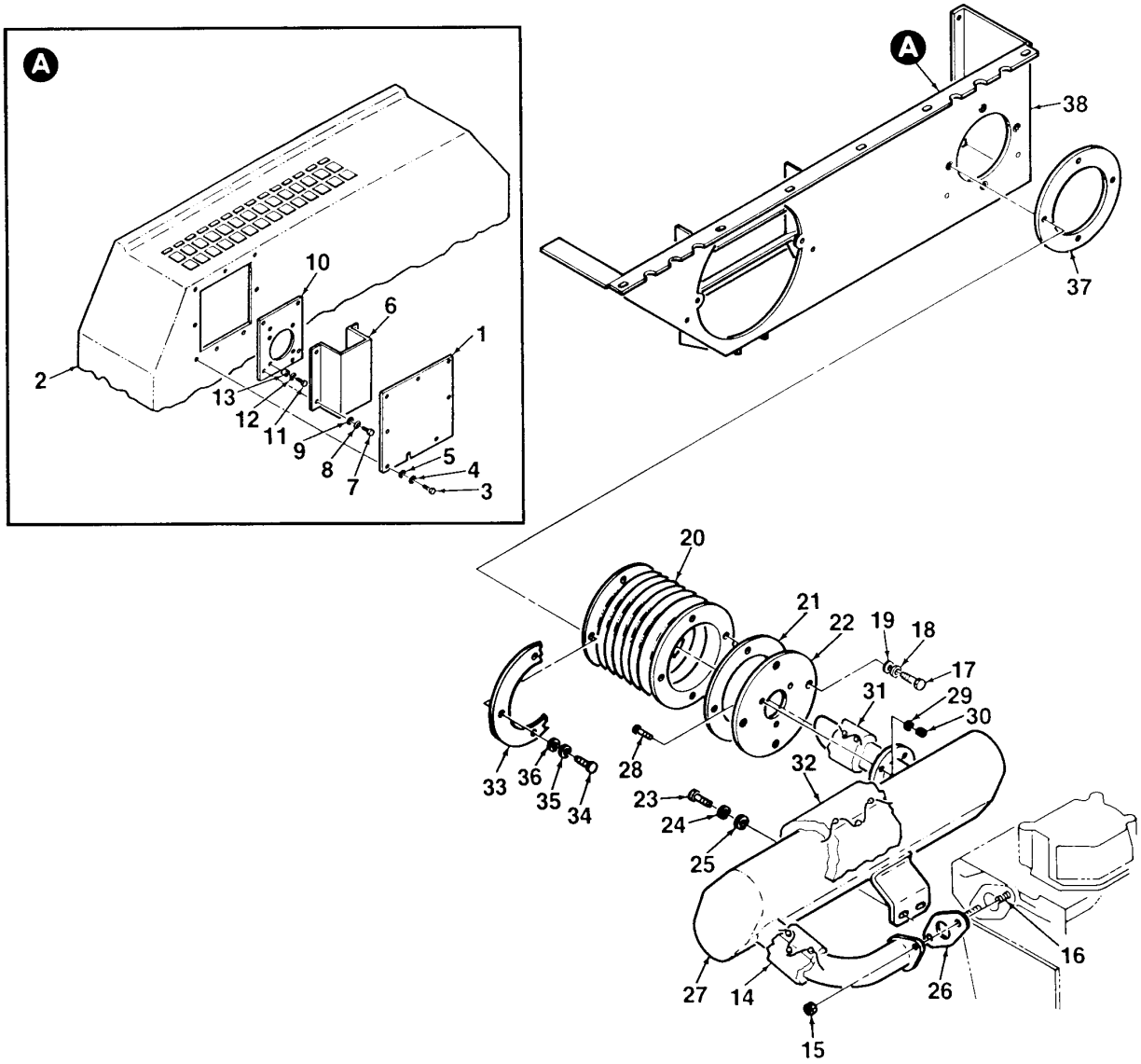

Figure 4-34. Muffler Assembly
(Sheet 1 of 2)

4-43. MUFFLER ASSEMBLY MAINTENANCE - cont.

B. INSPECTION.

1. Inspect muffler, bellows, and flanges for cracks, dents, corrosion, and obvious damage. Check for holes or evidence of deterioration.

2. Remove and replace any component that is damaged to the extent that it will effect the safe operation of the generator set

C. INSTALLATION.

1. Install bellows (20, Figure 4-34), flange (33), and gasket (37) onto duct (38) using screws (34), lockwashers (35), and washers (36).

2. Install flange (22) onto muffler (27) using three screws (28), lockwashers (29), and nuts (30).

3. Mate muffler (27)and gasket (26) to engine block and secure using two screws (23), lockwashers (24), and washers (25).

4. Install thermal wrap (31) and thermal blanket (32) onto muffler (27). Secure using lockwire.

5. Install bellows (20) and gasket (21) onto flange (22). Install four screws (17), lockwashers (18), and washers (19).

6. Install two nuts (15) onto cylinder head studs (16). Torque nuts to 14 to 16 ft-lbs. Install thermal wrap (14) and secure using lockwire.

7. Install mounting plate (10) onto left side panel (2) using four screws (11), lockwashers (12), and washers (13).

8. Install deflector panel (6) onto left side panel (2) using four screws (7), lockwashers (8), and washers (9).

9. Install access plate (1) onto left side panel (2) using six screws (3), lockwashers (4), and washers (5).

10. Close main access cover and lock in place using latches.

4-43. MUFFLER ASSEMBLY MAINTENANCE - cont.

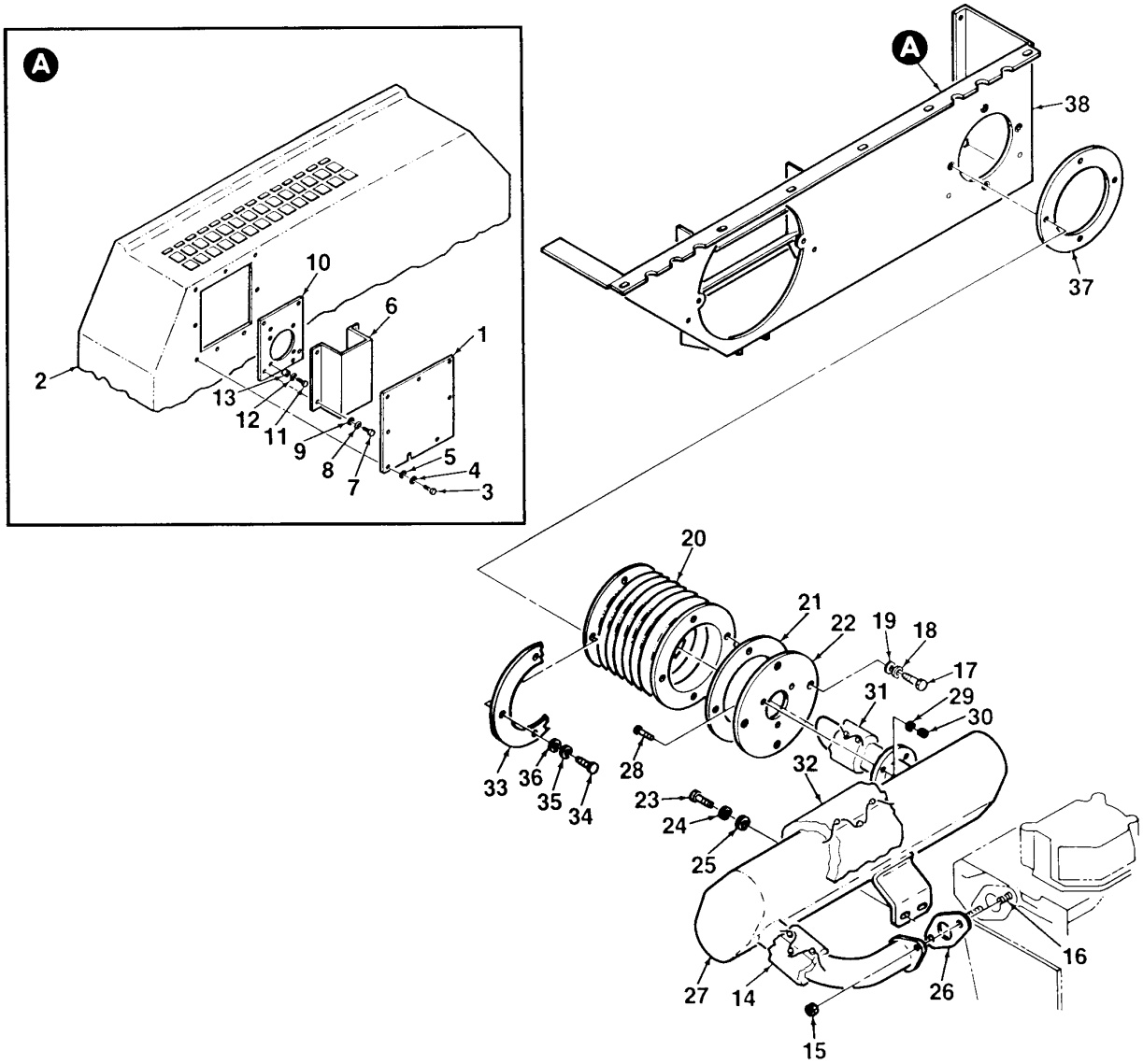

Figure 4-34. Muffler Assembly
(Sheet 2 of 2)

4-44. BATTERY MAINTENANCE

This task covers removal, inspection, installation, and servicing (as applicable).

INITIAL SETUP

Tools:
Tool Kit, General Mechanic's Automotive (Item 2, App. B, Sect. III)
Tester, Battery Electrolyte (Item 7, App. B, Sect. III)

Equipment Condition:
Generator set shut down (Para. 2-9)
Cable disconnected for SLAVE RECEPTACLE

Parts / Materials:
Distilled Water (Item 20, App. E)

A. REMOVAL.

1. Unlock main access cover latches and lift cover to open.

WARNING

Batteries give off flammable gas. Do not smoke or use open flame when performing maintenance. Flames and explosion could result in severe personal injury or death. Do not allow battery acid to contact skin or clothing. Contact of skin with battery acid liquid or inhalation of battery acid mist can cause severe burns, respiratory tract infection, and chronic bronchitis. If any battery acid liquid or mist contacts skin or eyes, immediately flush affected areas thoroughly with water. If vapors are inhaled, go to fresh air. Seek medical help immediately.

WARNING

When disconnecting battery cables, always remove positive cable first and negative cable last. Connect cable ends to enclosure ground lugs to prevent contact. Failure to observe this warning can result in personal injury.

2. Disconnect positive battery cable (1, Figure 4-35) from positive (+) battery post (2). Connect cable end to enclosure ground lug.

3. Disconnect negative battery cable (1) from negative (-) battery post (2). Connect cable end to enclosure ground lug.

4. Remove battery tie-down (3) from hold down rods (4) by removing six nuts (5) and three washers (6).

4-44. BATTERY MAINTENANCE - cont.

4. Carefully remove battery (7) from battery tray (8). Remove battery tray.

B. INSPECTION.

1. Inspect battery cables for corrosion, evidence of electrical short, and obvious damage. Check for cuts, tears, or exposed wires. Refer to Para. 4-45 for detailed inspection, cleaning, and repair or battery cables.

2. Inspect battery for cracks, corrosion, or evidence of leakage. Inspect battery posts for corrosion. Remove corrosion from cable terminals and battery posts using a wire terminal brush.

3. Remove and replace any component that is damaged to the extent that it will effect the safe operation of the generator set.

C. INSTALLATION.

1. Install battery tray (8, Figure 4-35) and battery (7).

2. Install battery tie-down (3) and secure to hold down rods (4) using six nuts (5) and three washers (6).

WARNING

When connecting battery cables, always connect positive cable first and negative cable last. Failure to observe this warning can result in personal injury.

3. Connect positive battery cable (1) to positive (+) battery post (2).

4. Connect negative battery cable (1) to negative (-) battery post (2).

5. Close main access cover and lock in place using latches.

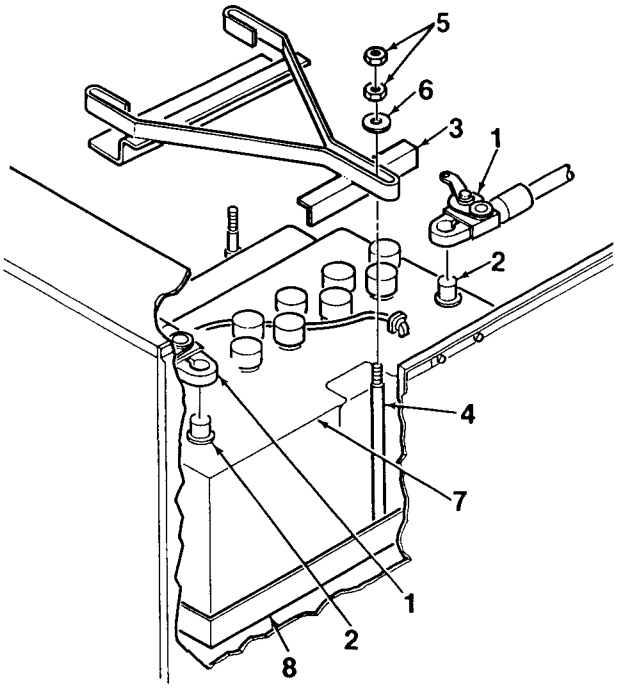

Figure 4-35. Battery

4-44. BATTERY MAINTENANCE - cont.

D. SERVICING.

The generator set is designed to accept and operate with either a standard wet cell battery or a sealed maintenance free battery. If a standard wet cell battery is used, check the electrolyte level and service as follows:

1. Remove caps from battery.

2. Check electrolyte level of cells. Ensure proper charge using electrolyte solution tester. Specific gravity reading shall be between 1.2767 and 1.2853.

3. Service cells as required using distilled water.

4. Install caps on battery and return generator set to service.

This page
Intentionally
Left blank

4-45. BATTERY CABLE ASSEMBLY MAINTENANCE

This task covers removal, inspection, and installation.

INITIAL SETUP

Tools:
Tool Kit, General Mechanic's Automotive (Item 2, App. B, Sect. III)

Equipment Condition:
Generator set shut down (Para. 2-9)
Cable disconnected for SLAVE RECEPTACLE

A. REMOVAL.

1. Unlock main access cover latches and lift cover to open.

WARNING

Batteries give off flammable gas. Do not smoke or use open flame when performing maintenance. Flames and explosion could result in severe personal injury or death. Do not allow battery acid to contact skin or clothing. Contact of skin with battery acid liquid or inhalation of battery acid mist can cause severe burns, respiratory tract infection, and chronic bronchitis. If any battery acid liquid or mist contacts skin or eyes, immediately flush affected areas thoroughly with water. If vapors are inhaled, go to fresh air. Seek medical help immediately.

WARNING

When disconnecting battery cables, always remove positive cable first and negative cable last. Failure to observe this warning can result in personal injury.

2. Disconnect positive battery cable (1, Figure 4-36) from positive (+) battery post (2). Disconnect opposite end of cable from starter's positive terminal (3) by removing nut (4) and washer (5).

3. Disconnect negative battery cable (6) from negative (-) battery post (7). Disconnect opposite end of cable from engine ground lug by removing screw (9), lockwasher (10), and washer (11). Leave electrical cable (8) in place on ground lug.

B. INSPECTION.

1. Inspect battery cables for corrosion, evidence of electrical short, and obvious damage. Check for cuts, tears, or exposed wires.

4-45. BATTERY CABLE ASSEMBLY MAINTENANCE - cont.

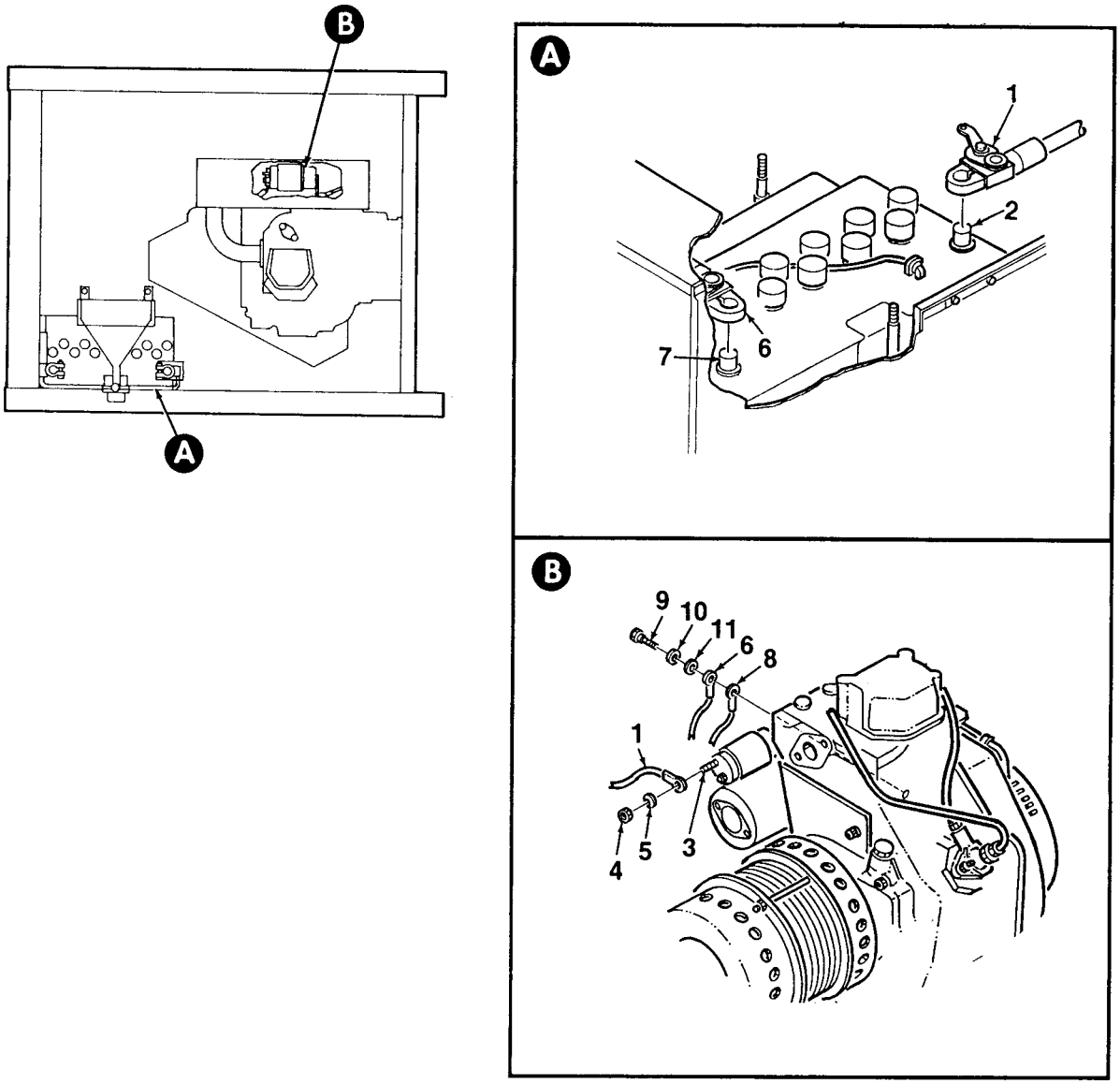

Figure 4-36. Battery Cables
(Sheet 1 of 2)

4-45. BATTERY CABLE ASSEMBLY MAINTENANCE - cont.

2. Inspect battery terminals and crimp lugs for corrosion and damage. Check for security of attachment. Inspect insulation sleeving for deterioration.

3. Inspect battery for cracks, corrosion, or evidence of leakage. Inspect battery posts for corrosion. Remove corrosion from cable terminals and battery posts using a wire terminal brush.

4. Replace any component that is damaged to the extent that it will effect the safe operation of the set.

C. INSTALLATION.

1. Ensure battery is secure in battery tray. Tighten hold down rods as required.

WARNING

When connecting battery cables, always connect positive cable first and negative cable last. Failure to observe this warning can result in personal injury.

2. Connect positive battery cable (1, Figure 4-36) to starter's positive terminal (3) using nut (4) and washer (5). Connect opposite end of cable to positive (+) battery post (2).

3. Connect negative battery cable (6) and cable (8) to engine ground lug using screw (9), lockwasher (10), and washer (11). Connect opposite end of cable (6) to negative (-) battery post (7).

4. Close main access cover and lock in place using latches.

4-45. BATTERY CABLE ASSEMBLY MAINTENANCE - cont.

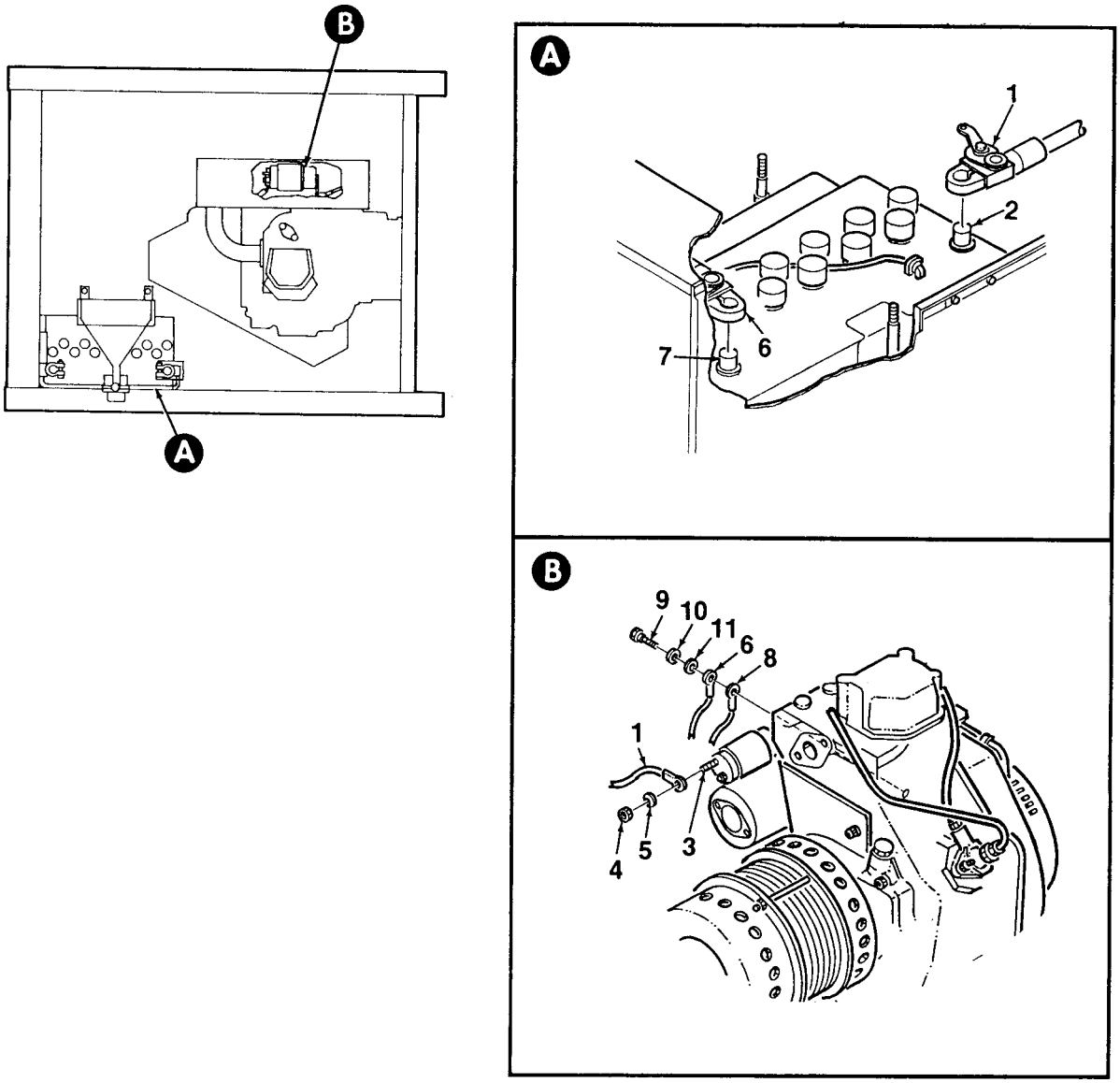

Figure 4-36. Battery Cables
(Sheet 2 of 2)

4-46. MAIN ACCESS COVER MAINTENANCE

This task covers removal, inspection, and installation.

INITIAL SETUP

Tools:
Tool Kit, General Mechanic's Automotive (Item 2, App. B, Sect. III)

Equipment Condition:
Generator set shut down (Para. 2-9)

Parts / Materials:
Sealant, RTV (Item 14, App. E)

Personnel Required:
Two (2) personnel

A. REMOVAL.

1. Unlock generator set main access cover latches (2, Figure 4-37).

2. Disconnect electrical plug (22) from fan (23). Remove two wire clamps (24) by removing screws (25), lockwashers (26), and washers (27).

3. Release two cover supports (3) from cover (1) by removing screws (4), lockwashers (5), and washers (6).

4. Remove cover hinges (7, 11) from cover (1) by removing four screws (12), washers (13), and locknuts (14). Lift cover (1) off generator set and place on a clean work surface for further maintenance.

5. Remove cover hinges (7, 11) from left side panel by removing six screws (8), washers (9), and locknuts (10).

6. Remove swivel joints (15) from cover supports (3) by removing washers (16) and locknuts (17).

7. If right side cover support (3) must be removed, remove rear panel (Para. 4-12).

8. Remove cover supports (3) by removing screws (18), washers (19), and locknuts (20). Remove spacers (21).

4-46. MAIN ACCESS COVER MAINTENANCE - cont.

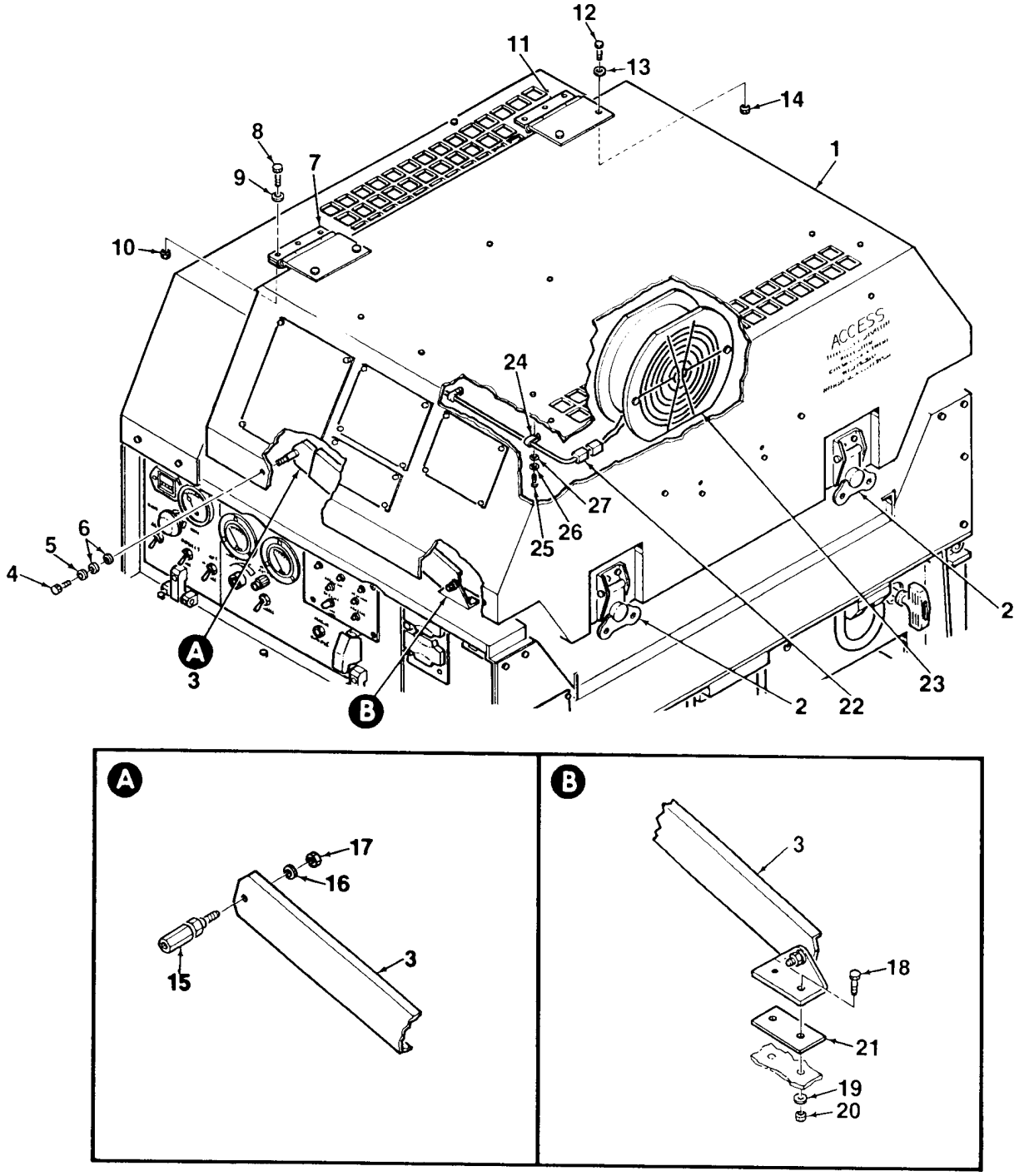

Figure 4-37. Main Access Cover
(Sheet 1 of 5)

4-46. MAIN ACCESS COVER MAINTENANCE - cont.

9. Remove cover latches (28) from cover (1) by removing screws (29), washers (30), and locknuts (31).

10. Remove keeper plates (32) from right side panel by removing screws (33), washers (34), and locknuts (35).

11. Remove air outlet panel (36) from the underside of cover (1) by removing nine screws (37), washers (38), and locknuts (39).

12. Remove air louver (40) from air outlet insulation (36) by removing four screws (41), lockwashers (42), and washers (43).

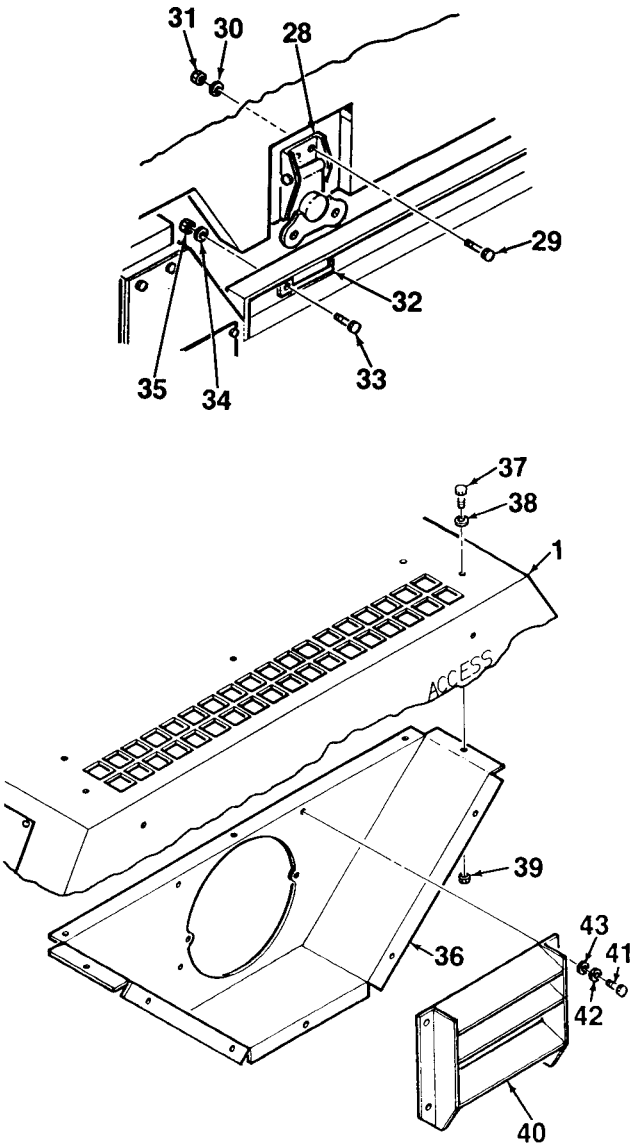

Figure 4-37. Main Access Cover (Sheet 2 of 5)

4-46. MAIN ACCESS COVER MAINTENANCE - cont.

13. Remove laminated cards (44) from document tray (48) by removing screw (45), lockwasher (46), and washer (47).

14. Remove document tray (48) from cover (1) by removing screws (49), lockwashers (50), and washers (51). Remove insulation (53).

15. Remove four spacers (52) from cover (1) by removing screws (54), lockwashers (55), and washers (56).

B. INSPECTION.

1. Inspect main access cover for corrosion, cracks, dents, scratches, or other obvious damage. Inspect air inlet grate for damage.

2. Inspect cover latches for corrosion and damage. Check for smooth operation, free of binding.

3. Inspect cover insulation for cuts, tears, deterioration, or other damage. Ensure insulation is clean, free of dirt, grime, or grease.

4. Inspect cover identification and caution plates for legibility and security of attachment.

5. Remove and replace any component that is damaged to the extent that it will effect the safe operation of the generator set.

C. INSTALLATION.

1. Install four spacers (52, Figure 4-37) onto underside of main access cover (1) using screws (54), lockwashers (55), and washers (56).

2. Install insulation (53) and document tray (48) over four spacers (52). Secure using three screws (49), lockwashers (50), and washers (51).

3. Secure laminated cards (44) to document tray (48) using screw (45), lockwasher (46), and washer (47).

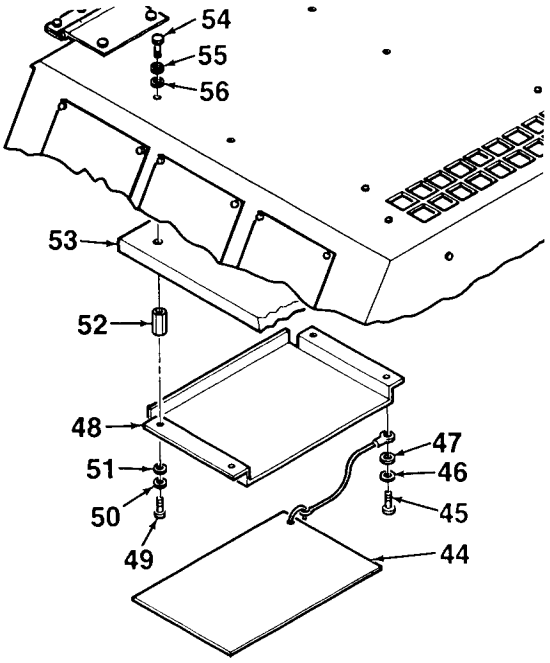

Figure 4-37. Main Access Cover (Sheet 3 of 5)

4-46. MAIN ACCESS COVER MAINTENANCE - cont.

4. Install air louver (40) onto air outlet insulation (36) using four screws (41), lockwashers (42), and washers (43).

5. Install air outlet panel (36) to the underside of cover (1) using nine screws (37), washers (38), and locknuts (39).

6. Install keeper plates (32) onto right side panel using screws (33), washers (34), and locknuts (35)

7. Install cover latches (28) onto cover (1) using screws (29), washers (30), and locknuts (31).

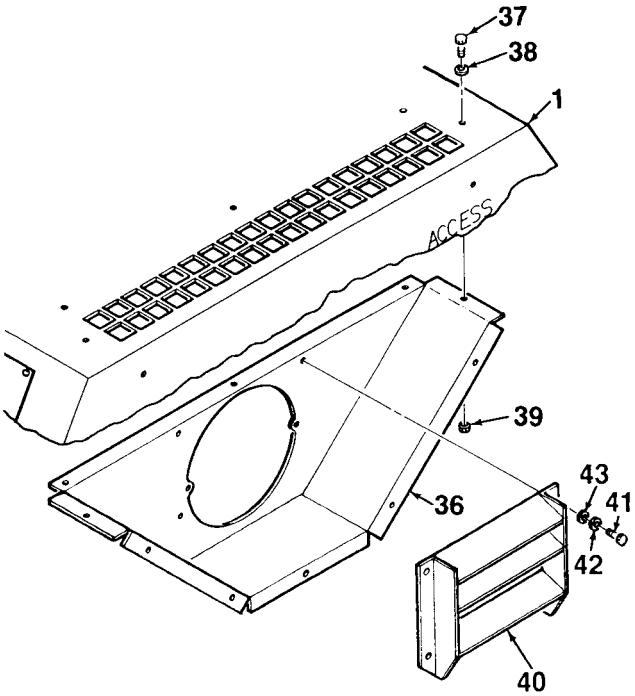

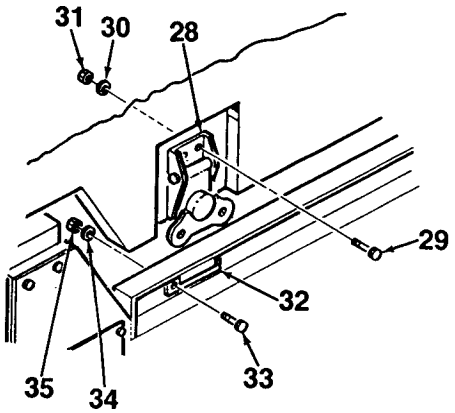

Figure 4-37. Main Access Cover (Sheet 4 of 5)

4-46. MAIN ACCESS COVER MAINTENANCE - cont.

8. Install cover supports (3) to skid base using screws (18), washers (19), locknuts (20), and spacers (21).

9. Install swivel joints (15) onto cover supports (3) using washers (16) and locknuts (17).

10. Secure cover hinges (7, 11) to left side panel using six screws (8), washers (9), and locknuts (10).

11. Lift up cover (1) and place onto generator set, aligning hinge mounting holes. Apply RTV sealant to cover hinges (7, 11). Install hinges onto cover (1) using four screws (12), washers (13), and nuts (14).

12. Attach two cover supports (3) to cover (1) using screws (4), lockwashers (5), and washers (6).

13. Connect electrical plug (22) to fan (23). Secure electrical wiring to inside of cover (1) using two wire clamps (24), screws (25), washers (26), and lockwashers (27).

14. Close main access cover (1) and lock latches (2).

4-46. MAIN ACCESS COVER MAINTENANCE - cont.

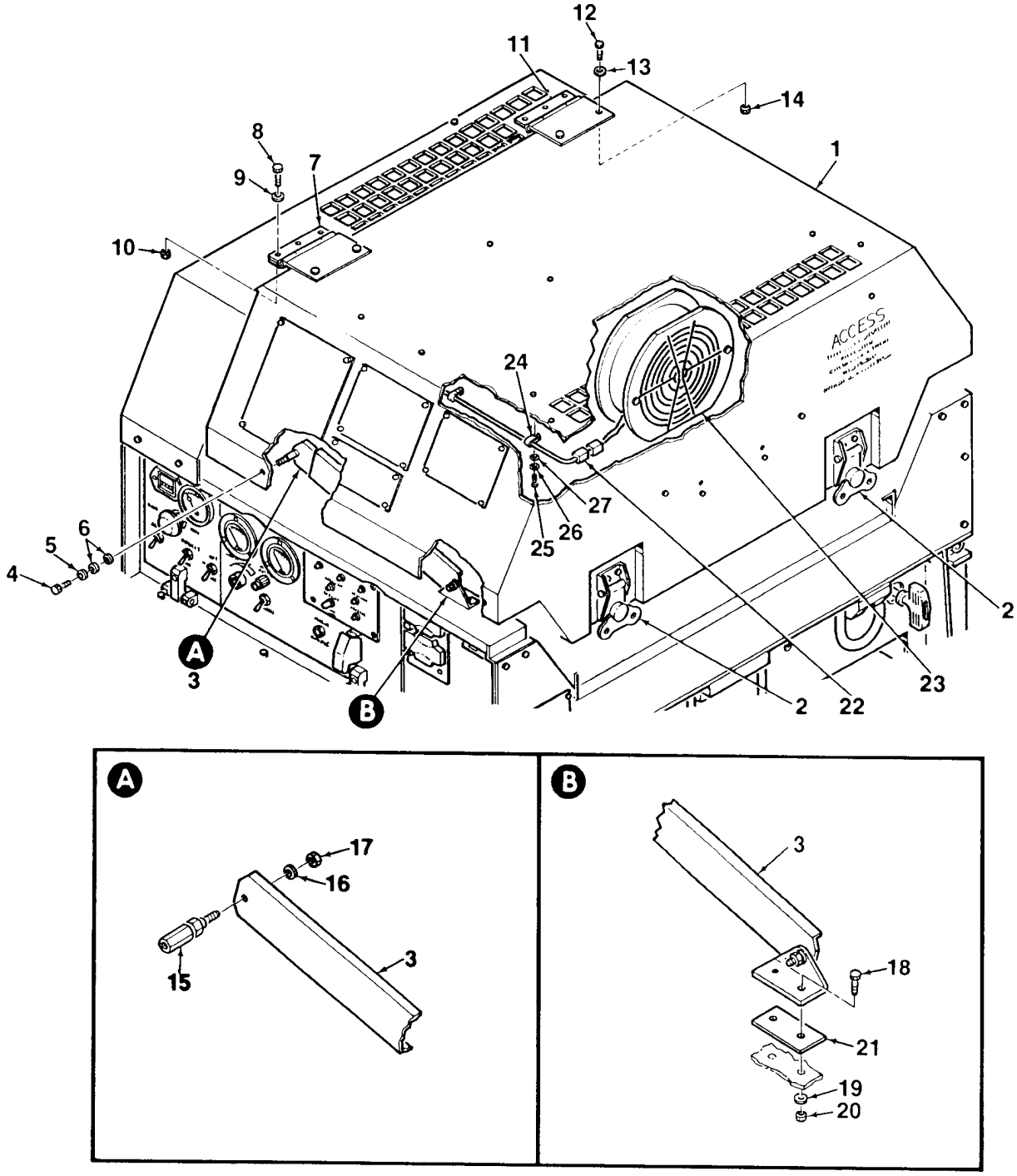

Figure 4-37. Main Access Cover
(Sheet 5 of 5)

This page
intentionally
left blank

4-47. ENCLOSURE PANEL MAINTENANCE

This task covers removal, inspection, and installation.

INITIAL SETUP

Tools:
Tool Kit, General Mechanic's Automotive (Item 2, App. B, Sect. III)

Equipment Condition:
Control box removed (Para. 4-12)
Main access cover removed (Para. 4-46)
High temperature cooling fan and switch removed (Para. 4-48)
Fuel fill pocket removed (Para. 4-50)
Power inverter / converter removed (Para. 4-52)
DC magnetic contactors removed (Para. 4-53)
Muffler disengaged from left side panel

A. REMOVAL.

1. Remove three screws (2, Figure 4-38), washers (3), and locknuts (4) to release left side panel (1) from air inlet panel (20).

2. Remove five screws (5), ten washers (6), and five locknuts (7). Remove screw (8), two washers (9), and locknut (10). Remove screws (11, 12) to release left side panel (1) from skid base.

3. Remove two screws (13), washers (14), and locknuts (15) to release left side panel (1) from bracket (16). Carefully lift left side panel off skid base.

4. Remove angle bracket (16) from air inlet panel (25) by removing two screws (17), washers (18), and locknuts (19).

5. Remove air inlet cover (20) from air inlet panel (25) by removing nine screws (21), lockwashers (22), and washers (23) from captive nuts (24). Remove acoustic insulation (33).

6. Remove air inlet panel (25) from skid base by removing four screws (26), washers (27), and locknuts (28), and four screws (29), washers (30), lockwashers (31), and captive nuts (32).

7. Remove air outlet panel (34) from left side panel (1) by removing eleven screws (35), washers (36), and locknuts (37).

8. Remove louver (38) from air outlet panel (34) by removing four screws (39), lockwashers (40), and washers (41).

9. Remove acoustic insulation (42).

4-47. ENCLOSURE PANEL MAINTENANCE - cont.

B. INSPECTION.

1. Inspect enclosure panels for corrosion, cracks, dents, scratches, or other obvious damage. Inspect fuel fill pocket for evidence of fuel leakage.

2. Inspect acoustic insulation for cuts, tears, rips, or deterioration.

3. Remove and replace any component that is damaged to the extent that it will effect the safe operation of the generator set.

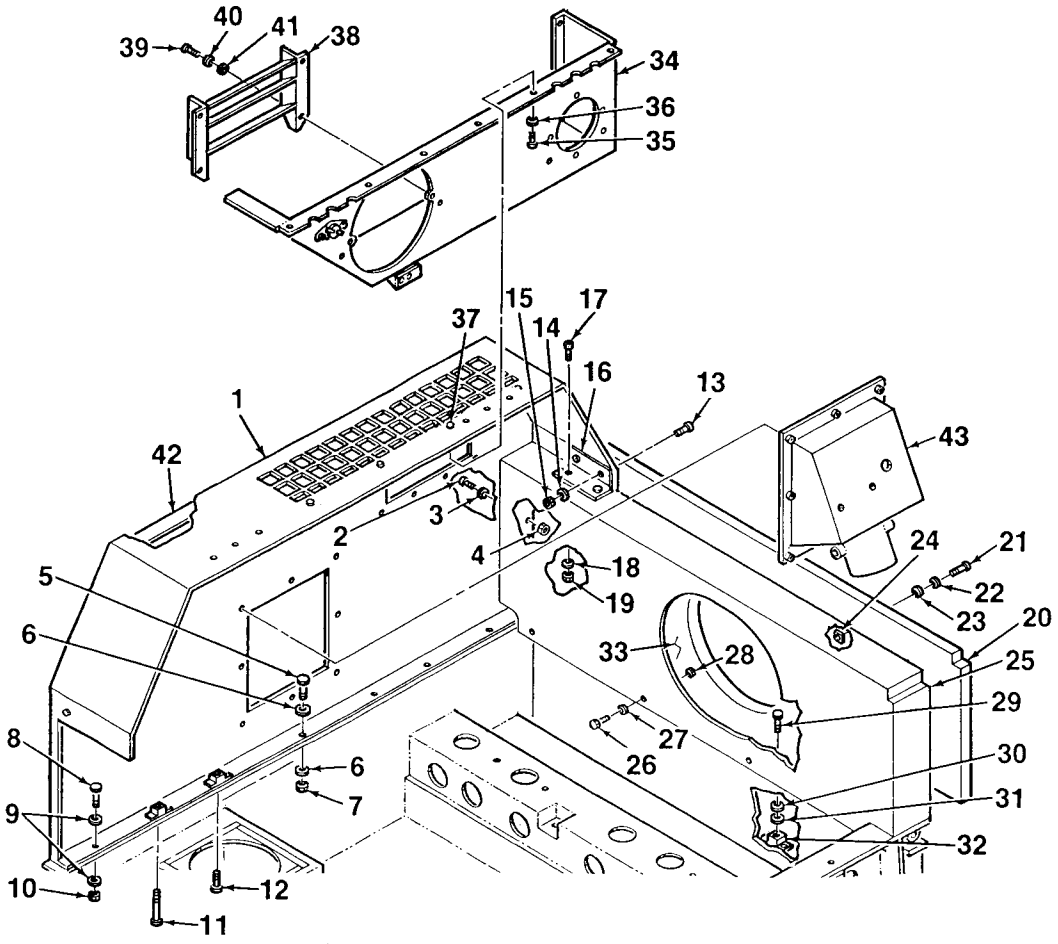

Figure 4-38. Enclosure Panels
(Sheet 1 of 2)

4-47. ENCLOSURE PANEL MAINTENANCE - cont.

C. INSTALLATION.

1. Install acoustic insulation (42, Figure 4-38).

2. Install louver (38) onto air outlet panel (34) using four screws (39), lockwashers (40), and washers (41).

3. Install air outlet panel (34) onto left side panel (1) using eleven screws (35), washers (36), and locknuts (37).

4. Install acoustic insulation (33). Install air inlet cover (20) onto air inlet panel (25) using nine screws (21), lockwashers (22), washers (23), and captive nuts (24).

5. Install angle bracket (16) onto air inlet panel (25) using two screws (17), washers (18), and locknuts (19).

6. Install air inlet panel (25) onto skid base using four screws (26), washers (27), and locknuts (28), and four screws (29), washers (30), lockwashers (31), and captive nuts (32).

7. Position left side panel (1) onto skid base. Secure using five screws (5), ten washers (6), and five locknuts (7). Install screw (8), two washers (9), and locknut (10). Install screws (11, 12).

8. Attach left side panel (1) to air inlet panel (20) using three screws (2), washers (3), and locknuts (4).

9. Attach left side panel (1) to bracket (16) using two screws (13), washers (14), and locknuts (15).

10. Install high temperature cooling fan and switch (Para. 4-48).

11. Install control box (Para. 4-12).

12. Install main access cover (Para. 4-46).

13. Install DC magnetic contactors (Para. 4-53).

14. Install power inverter / converter (Para. 4-52).

15. Install fuel fill pocket (Para. 4-50).

4-47. ENCLOSURE PANEL MAINTENANCE - cont.

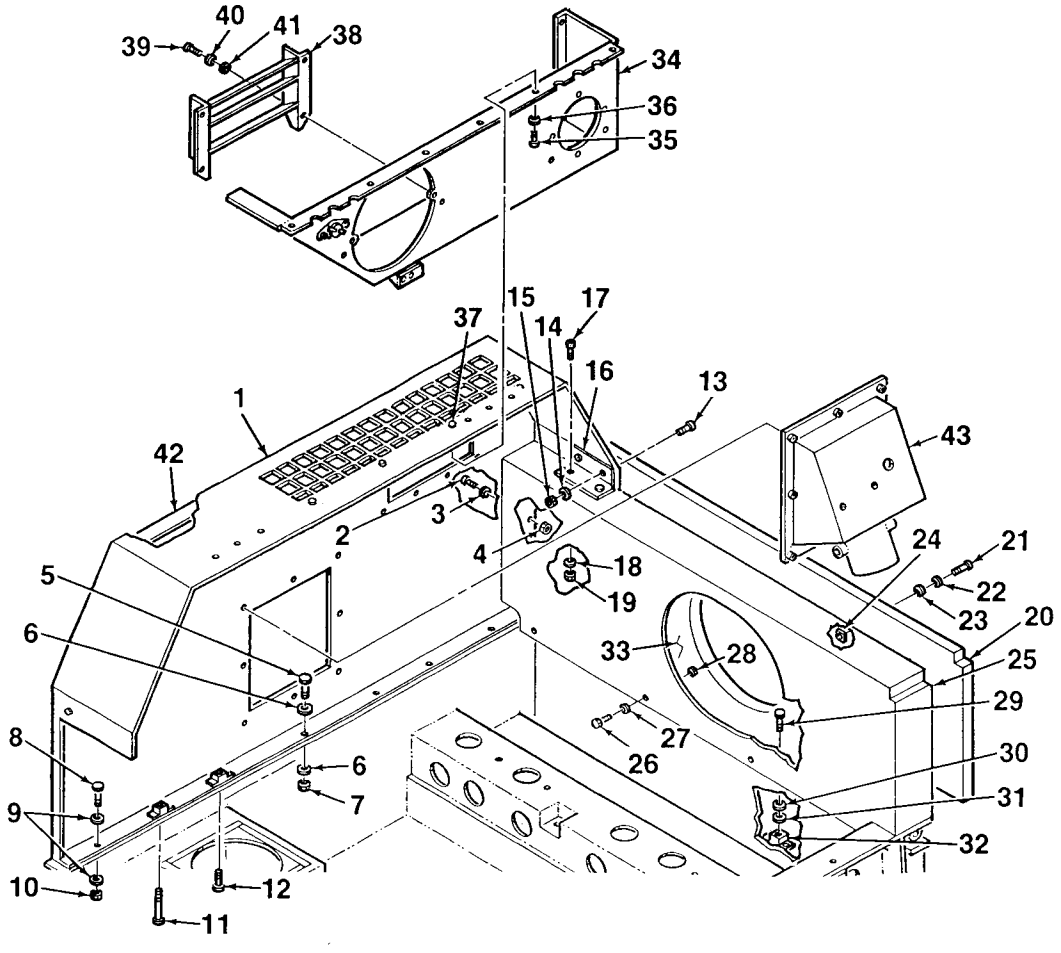

Figure 4-38. Enclosure Panels
(Sheet 2 of 2)

4-48. COOLING FAN AND TEMPERATURE SWITCH MAINTENANCE

This task covers removal, inspection, and installation.

INITIAL SETUP

Tools:
Tool Kit, General Mechanic's Automotive (Item 2, App. B, Sect. III)

Equipment Condition:
Generator set shut down (Para. 2-9)
Battery cables disconnected
Cable disconnected for SLAVE RECEPTACLE

A. REMOVAL.

1. Unlock generator set main access cover latches and lift cover to open.

2. Tag and disconnect two electrical wires (18, 19, Figure 4-39) from high temperature switch S20 (17) (110° F). Remove temperature switch (17) from rear wall of enclosure by removing two screws (14), lockwashers (15), and washers (16).

3. Disconnect fan power cord (6) from generator set wiring harness.

4. Remove high temperature fan (2) from rear wall of enclosure by removing two screws (8), lockwashers (9) and washers (10).

NOTE

Remove finger guard (1) only if fan (2) is to be replaced. Finger guard must be retained for use on new fan.

5. Remove finger guard (1) from fan (2) by removing two screws (3), washers (4), and nuts (5).

6. Disconnect electrical wire (7) from fan (2) by removing screw (11), lockwasher (12), and washer (13).

4-48. COOLING FAN AND TEMPERATURE SWITCH MAINTENANCE - cont.

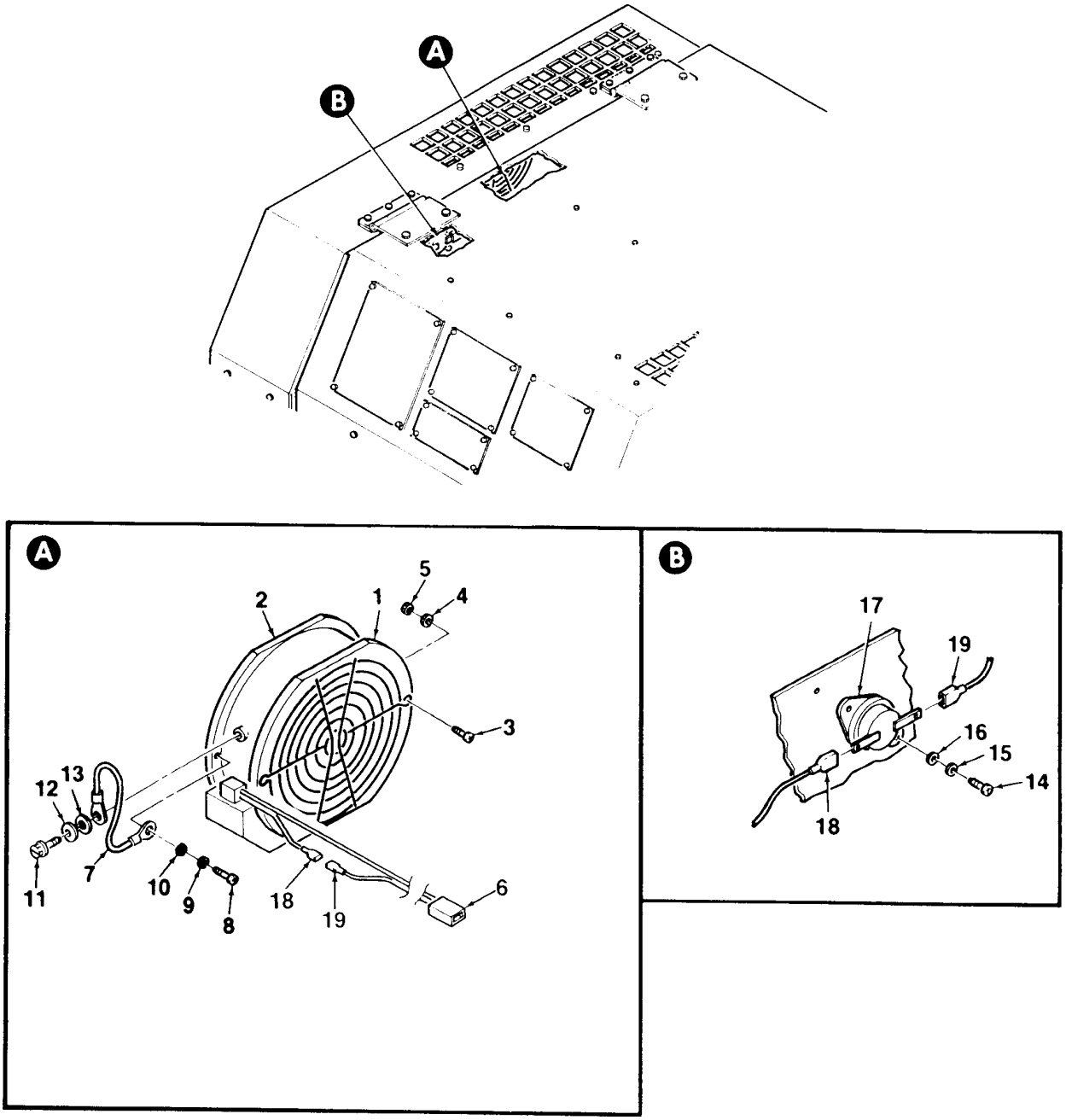

Figure 4-39. High Temperature Switch and Cooling Fan Removal

4-48. COOLING FAN AND TEMPERATURE SWITCH MAINTENANCE - cont.

7. Tag and disconnect two electrical wires (18, 19, Figure 4-40) from low temperature switch S21 (17) (85° F). Remove temperature switch from main access cover by removing two screws (14), lockwashers (15), and washers (16).

8. Disconnect fan power cord (6) from generator set wiring harness.

9. Remove low temperature fan (2) from main access cover by removing two screws (8), lockwashers (9) and washers (10).

NOTE

Remove finger guard (1) only if fan (2) is to be replaced. Finger guard must be retained for use on new fan.

10. Remove finger guard (1) from fan (2) by removing two screws (3), washers (4), and nuts (5).

11. Disconnect electrical wire (7) from fan (2) by removing screw (11), lockwasher (12), and washer (13).

B. INSPECTION.

1. Inspect finger guards and cooling fans for obvious damage. Manually operate fan blades to ensure smooth operation, free from binding.

2. Inspect temperature switches for obvious damage. Check that electrical terminals are securely attached and free of corrosion.

3. Inspect electrical wiring for cuts, crimps, bare wire, or other damage. Ensure terminal lugs are securely attached. Inspect fan power cords for damage. Check that electrical connectors are securely attached.

4. Remove and replace any component that is damaged to the extent that it will effect the safe operation of the generator set.

4-48. COOLING FAN AND TEMPERATURE SWITCH MAINTENANCE - cont.

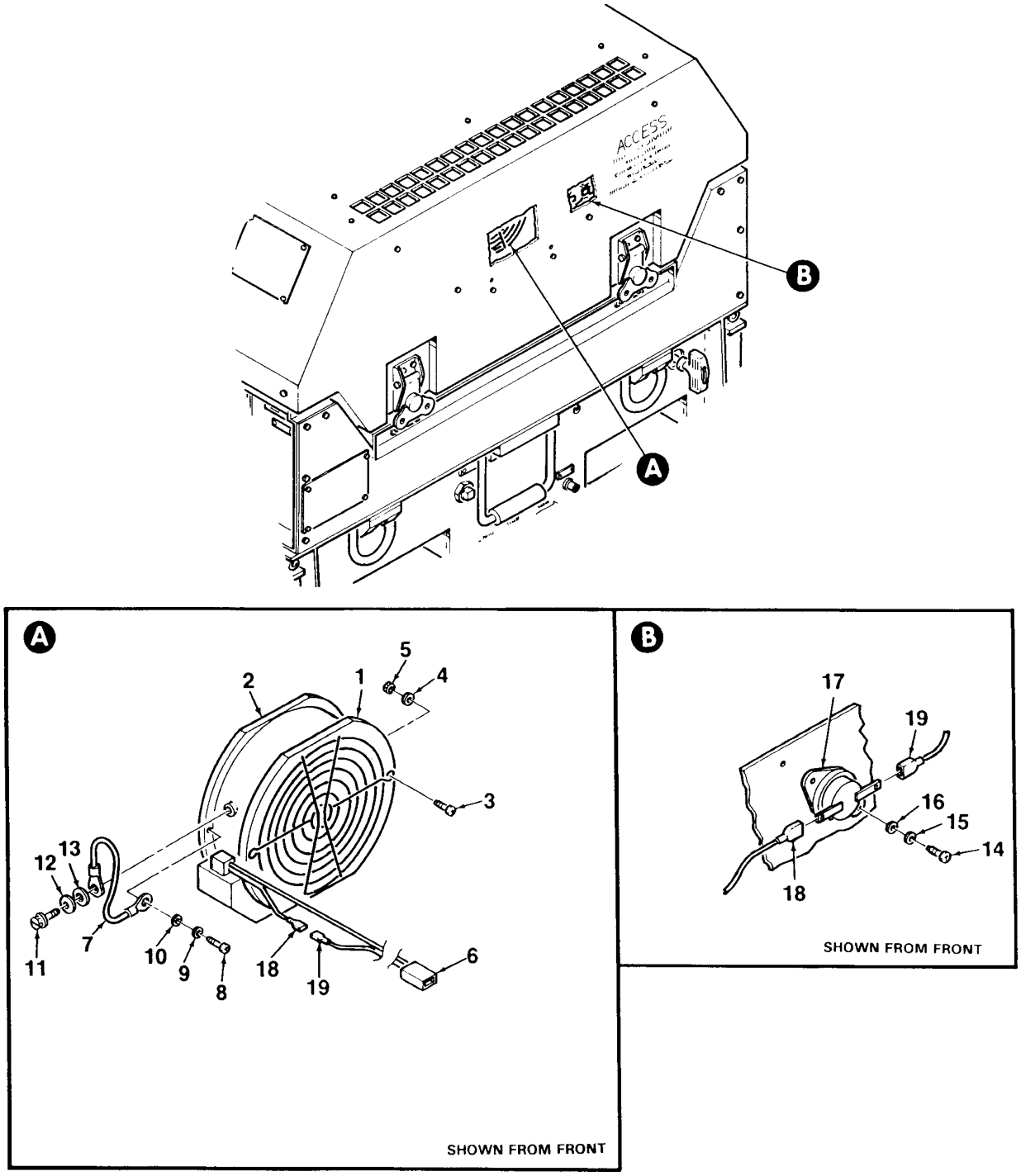

Figure 4-40. Low Temperature Switch and Cooling Fan Removal

4-48. COOLING FAN AND TEMPERATURE SWITCH MAINTENANCE - cont.

C. INSTALLATION.

1. Mate low temperature switch S21 (17, Figure 4-41) (85° F) to main access cover and secure using two screws (14), lockwashers (15), and washers (16). Connect two electrical wires (18, 19) to temperature switch.

2. Mate low temperature fan (2) to main access cover and secure using two screws (8), lockwashers (9), and washers (10). Left hand screw (8) secures electrical wire (7).

3. Connect fan power cord (6) to generator set wiring harness. Connect wire (7) to fan using screw (11), lockwasher (12), and washer (13).

4. Install finger guard (1) onto low temperature fan (2) using two screws (3), washers (4), and nuts (5).

4-48. COOLING FAN AND TEMPERATURE SWITCH MAINTENANCE - cont.

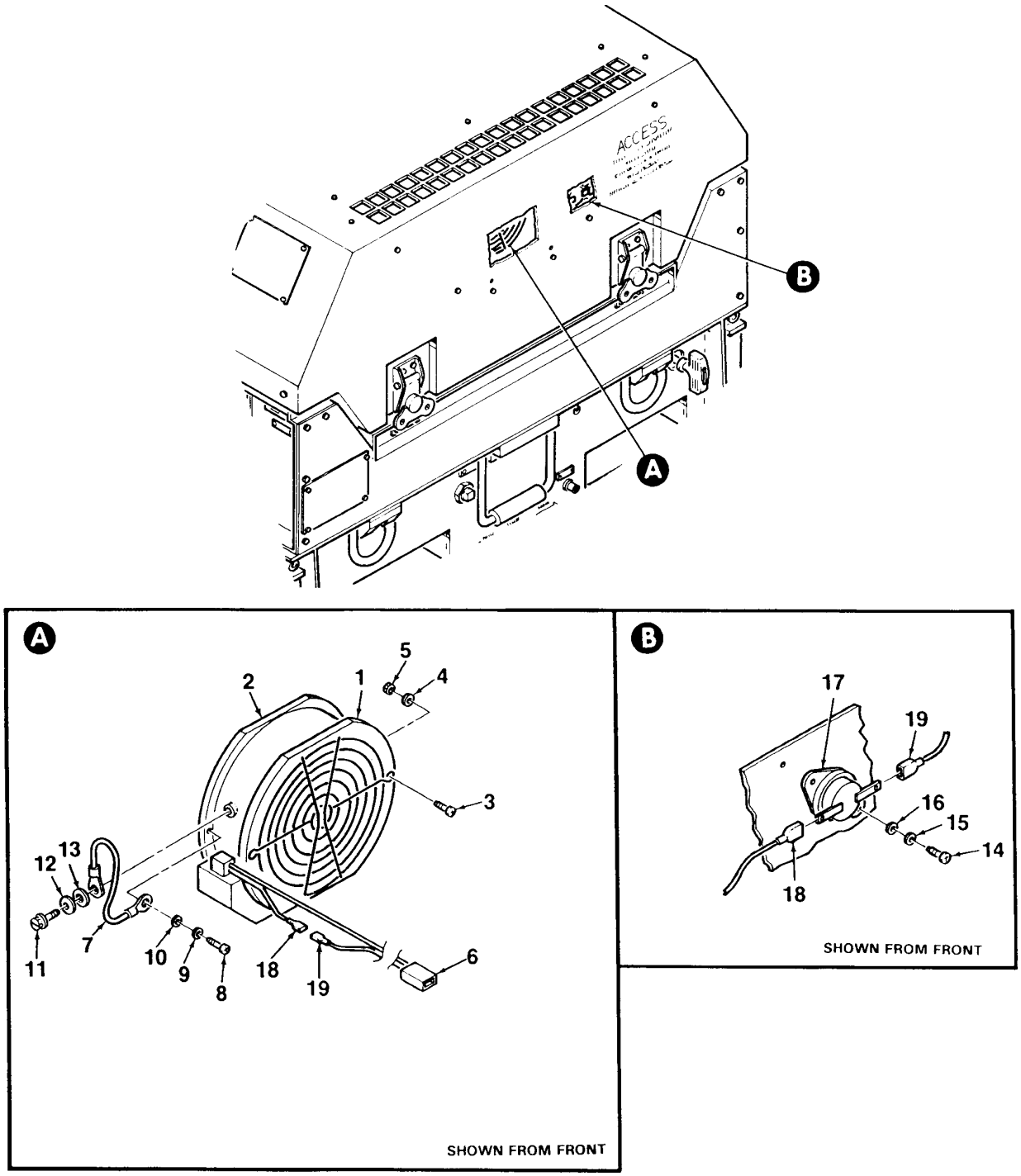

Figure 4-41. Low Temperature Switch and Cooling Fan Installation

4-48. COOLING FAN AND TEMPERATURE SWITCH MAINTENANCE - cont.

5. Mate high temperature switch S20 (17, Figure 4-42) (110° F) to rear wall of enclosure and secure using two screws (14), lockwashers (15), and washers (16). Connect two electrical wires (18, 19) to temperature switch.

6. Mate high temperature fan (2) to rear wall of enclosure and secure using two screws (8), lockwashers (9), and washers (10). Left hand screw (8) secures electrical wire (7).

7. Connect fan power cord (6) to generator set wiring harness. Connect wire (7) to fan using screw (11), lockwasher (12), and washer (13).

8. Install finger guard (1) onto fan (2) using two screws (3), washers (4), and nuts (5).

9. Close main access cover and lock in place using latches.

4-48. COOLING FAN AND TEMPERATURE SWITCH MAINTENANCE - cont.

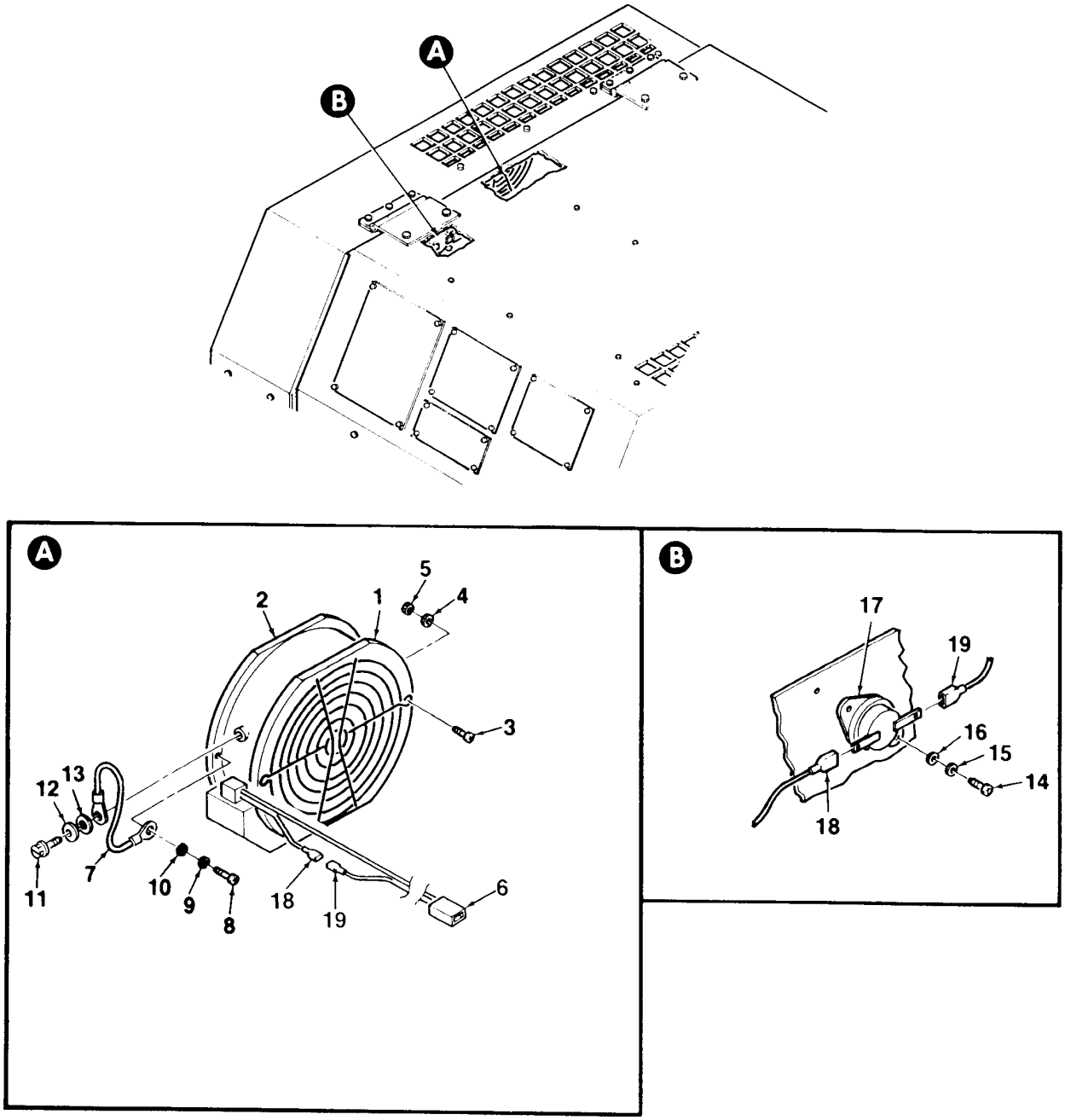

Figure 4-42. High Temperature Switch and Cooling Fan Installation

4-49. FUEL FILTER / WATER SEPARATOR MAINTENANCE

This task covers preventive maintenance servicing (PMCS), removal, inspection, and installation.

INITIAL SETUP

Tools:
Tool Kit, General Mechanic's Automotive (Item 2, App. B, Sect. III)

Parts / Materials:
Sealant, Thread (Item 15, App. E)
Teflon Tape (Item 19, App. E)

Equipment Condition:
Generator set shut down (Para. 2-9)
Battery cables disconnected
Cable disconnected for SLAVE RECEPTACLE

A. SERVICING.

1. Unlock main access cover latches and lift cover to open.

2. Open filter / separator drain valve (1, Figure 4-43) and drain fluid through hose (2). Close valve (1) and disconnect hose (2) when drained.

3. Using a filter wrench, unscrew clear bowl (3) and filter (5) from filter head. Remove gasket (6).

4. Remove filter (5) from bowl (3). Remove gasket (4) and drain excess fuel.

11. Install new filter (5) and gasket (4) onto bowl (3).

12. Install bowl (3), filter (5), and gasket (6) onto filter head. Hand tighten.

13. Connect hose (2) to bowl (3) and close drain valve (1).

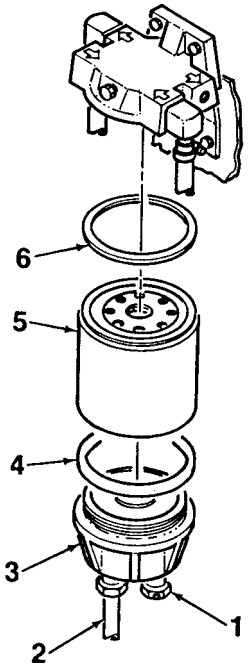

Figure 4-43. Filter Servicing

4-49. FUEL FILTER / WATER SEPARATOR MAINTENANCE - cont.

B. REMOVAL.

1. Unlock main access cover latches and lift cover to open.

2. Open filter / separator drain valve (13, Figure 4-44) and drain fluid through hose (4). Close valve (13) and disconnect hose (4).

3. Disconnect fuel hoses (1) from elbows (3) by loosening hose clamps (2).

4. Remove elbows (3) from filter / separator (5).

5. Remove filter / separator (5) from bracket (6) by removing two screws (7), washers (8), and locknuts (9).

6. If removal of bracket (6) is required, remove air inlet cover (Para. 4-47).

7. Remove bracket (6) from enclosure by removing two screws (10), washers (11), and locknuts (12).

C. INSPECTION.

1. Inspect filter / separator for cracks, corrosion, evidence of leakage, and obvious damage.

2. Inspect fuel hoses for cuts, cracks, or other damage.

3. Remove and replace any component that is damaged to the extent that it will effect the safe operation of the generator set.

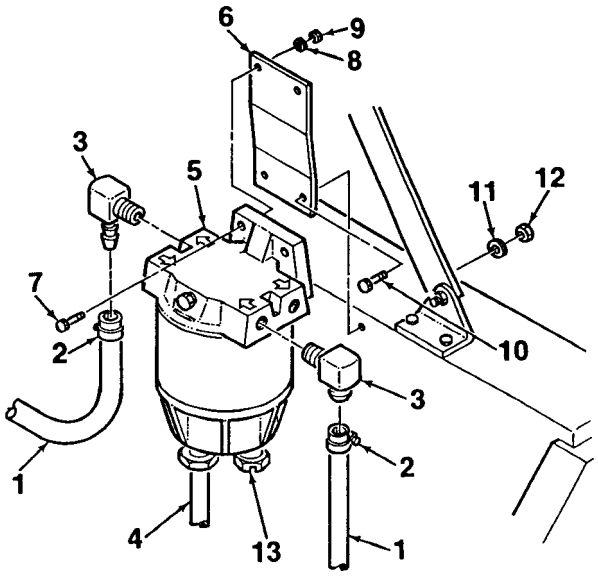

Figure 4-44. Fuel Filter / Water Separator (Sheet 1 of 2)

4-49. FUEL FILTER / WATER SEPARATOR MAINTENANCE - cont.

D. INSTALLATION.

1. Apply sealant to threads of three screws (7, Figure 4-44). Install filter / separator (5) onto bracket (6) using two screws (7), washers (8), and locknuts (9).

12. Apply teflon tape to threads of elbows (3). Install elbows into filter / separator (5).

13. Mate bracket (6) to enclosure. Secure using two screws (10), washers (11), and locknuts (12).

14. Connect fuel hoses (1) to elbows (3) and secure by tightening hose clamps (2).

15. Connect drain hose (4) to filter / separator (5). Close drain valve (13).

16. Reconnect battery. Close main access cover and lock in place using latches.

17. Place START / RUN/ STOP switch in RUN position until fuel bowl is filled. Check for evidence of leaks.

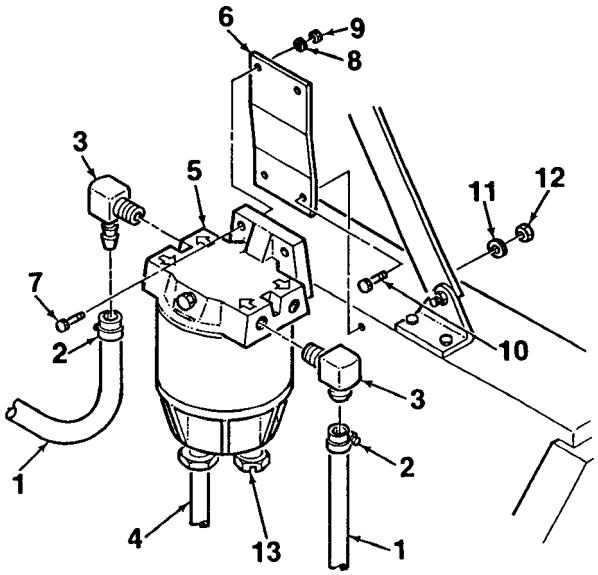

Figure 4-44. Fuel Filter / Water Separator (Sheet 2 of 2)

4-50. FUEL FILL CAP AND FILL POCKET MAINTENANCE

This task covers removal, inspection, and installation.

INITIAL SETUP

Tools:
Tool Kit, General Mechanic's Automotive (Item 2, App. B, Sect. III)

Parts / Materials:
Teflon Tape (Item 19, App. E)

Equipment Condition:
Generator set shut down (Para. 2-9)
Battery cables disconnected
Cable disconnected for SLAVE RECEPTACLE

A. REMOVAL.

1. Unlock main access cover latches and lift cover to open.

2. Remove fuel fill cap (1, Figure 4-45) from fuel fill throat (2). Remove fuel strainer assembly (3).

3. Release fuel cap chain (4) from fill pocket wall by removing screw (5) washer (6), and locknut (7).

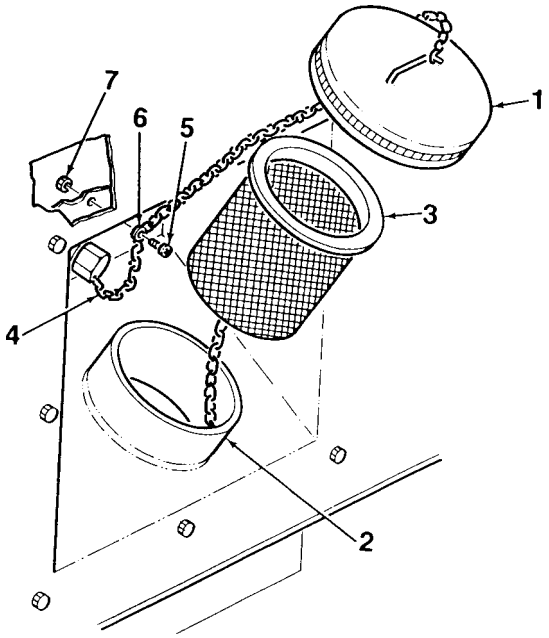

Figure 4-45. Fuel Fill Cap and Pocket (Sheet 1 of 2)

4-50. FUEL FILL CAP AND FILL POCKET MAINTENANCE - cont.

4. Loosen two clamps (10) and remove fill port collar (11) from fill pocket (8) and fuel tank (9).

5. Disconnect hose (12) from tee (17) by loosening clamp (13).

6. Disconnect hose (14) from fitting (15) by loosening clamp (16). Remove fitting (15), tee (17), and pipe (18) from fill pocket (8).

7. If removal of fill pocket (8) is required, remove auxiliary fuel pump and connectors (Para. 4-51) and power inverter / converter (Para. 4-52).

8. Remove fill pocket (8) from enclosure by removing eight screws (19), lockwashers (20), and washers (21).

B. INSPECTION.

1. Inspect fuel fill cap for obvious damage. Inspect for crossed, stripped, or damaged threads.

2. Inspect fuel strainer assembly for dirt, clogging, and corrosion. Check that all screen material is intact and free from damage. Ensure that screen is securely attached to lip.

3. Inspect fuel fill pocket for cracks, dents, or evidence of leakage. Inspect for corrosion.

4. Inspect fill port collar and fuel tank for cracks, dents, or evidence of leakage. Inspect for corrosion.

5. Remove and replace any component that is damaged to the extent that it will effect the safe operation of the generator set.

C. INSTALLATION.

1. Apply teflon tape to threads of all fitting threads prior to installation.

2. Connect pipe (18, Figure 4-45), tee (17), and fitting (15) to fill pocket (8).

3. Install collar (11) onto fill pocket (8) and fuel tank (9). Secure by tightening two clamps (10).

4. Install fill pocket (8) using eight screws (19), lockwashers (20), and washers (21).

5. Secure collar (11) to fill pocket (8) and fuel tank (9) using two clamps (10).

6. Connect hose (14) to fitting (15) and tighten clamp (16). Connect hose (12) to tee (17) and tighten clamp (13).

4-50. FUEL FILL CAP AND FILL POCKET MAINTENANCE - cont.

7. Install fill cap chain (4) to fill pocket using screw (5), washer (6), and locknut (7).

8. Carefully install fuel strainer assembly (3) into fuel throat (2), making sure not to damage screen. Screw cap (1) onto throat (2).

9. Install auxiliary fuel pump and fuel connection (Para. 4-51).

10. Install power inverter / converter (Para. 4-52).

11. Close main access cover and lock in place using latches.

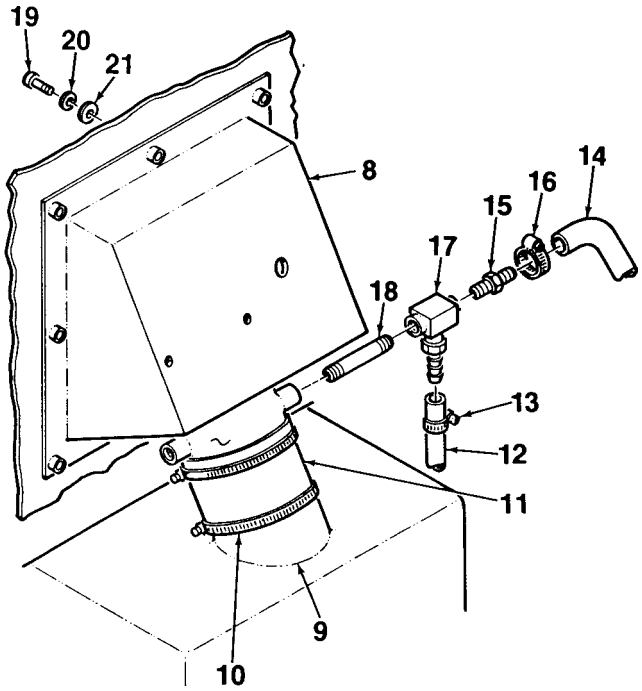

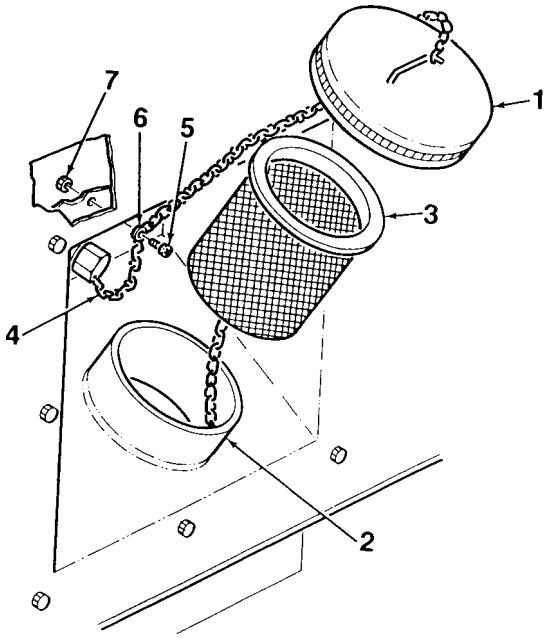

Figure 4-45. Fuel Fill Cap and Pocket (Sheet 2 of 2)

4-51. AUXILIARY FUEL PUMP MAINTENANCE

This task covers removal, inspection, and installation.

INITIAL SETUP

Tools:
Tool Kit, General Mechanic's Automotive (Item 2, App. B, Sect. III)

Parts / Materials:
Teflon Tape (Item 19, App. E)

Equipment Condition:
Generator set shut down (Para. 2-9)
Battery cables disconnected
Cable disconnected for SLAVE RECEPTACLE

Personnel Required:
Two (2) personnel

A. REMOVAL.

1. Unlock main access cover latches and lift cover to open.

2. Disconnect plug to auxiliary fuel pump electrical wires.

3. Disconnect fuel hose (1, Figure 4-46) from elbow (12) by loosening clamp (2).

4. Disconnect fuel hose (4) from fuel strainer (6) by loosening clamp (5).

5. Remove auxiliary fuel pump (7) from fill pocket (8) by removing two screws (9), washers (10), and locknuts (11).

6. Remove elbow (12) from auxiliary fuel pump (7). Remove fuel strainer (6).

7. Disconnect fuel hose (4) from fitting (13) by loosening clamp (5).

8. Remove fitting (13) from elbow (14). Remove cap (17), nut (16), washer (15), and elbow (14) from fill pocket (8).

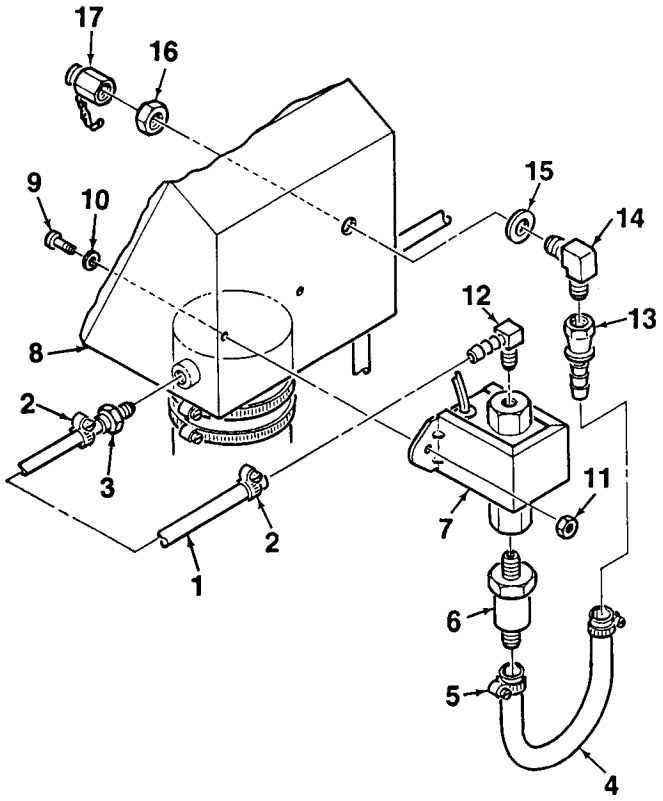

Figure 4-46. Auxiliary Fuel Pump

4-51. AUXILIARY FUEL PUMP MAINTENANCE - cont.

B. INSPECTION.

1. Inspect auxiliary fuel pump and fuel strainer for cracks, corrosion, evidence of leakage, and obvious damage.

2. Inspect fuel hoses for cuts, cracks, or other damage.

3. Inspect fuel fittings for crossed, stripped, or damaged threads.

4. Inspect electrical wiring for cuts, crimps, bare wire, or other damage. Ensure terminal lugs are securely attached.

5. Remove and replace any component that is damaged to the extent that it will effect the safe operation of the generator set.

C. INSTALLATION.

1. Apply teflon tape to threads of all fitting prior to installation.

2. Install elbow (14, Figure 4-46), washer (15), nut (16), and cap (17) onto fill pocket (8). Connect fitting (13) to elbow (14).

3. Install elbow (12) and fuel strainer (6) into auxiliary fuel pump (7).

4. Mate auxiliary fuel pump (7) to fill pocket (8) and secure using two screws (9), washers (10), and locknuts (11).

5. Connect fuel hose (4) to fuel strainer (6) and fitting (13). Secure by tightening clamps (5).

6. Connect fuel hose (1) to elbow (12). Secure by tightening clamp (2).

7. Close main access cover and lock in place using latches.

4-52. POWER INVERTER / CONVERTER MAINTENANCE

This task covers removal, inspection, and installation.

INITIAL SETUP

Tools:
Tool Kit, General Mechanic's Automotive (Item 2, App. B, Sect. III)

Equipment Condition:
AC circuit interrupter contactor removed (Para. 4-28)

A. REMOVAL.

1. Unlock main access cover latches and lift cover to open.

2. Tag and disconnect three electrical connectors from power inverter / converter (5, Figure 4-47). Remove two wire clamps (24) by removing screws (25).

3. Remove wire cover plate (1) from inverter / converter (5) by removing four screw and captive washer assemblies (2). Tag and disconnect electrical wires (4) by loosening screws (3). Reinstall screws and cover plate to prevent loss.

4. To prevent damage, tag and disconnect electrical harness connector J7 from rear of control box.

5. Open control panel by turning quarter-turn fasteners. Remove two screws (6), lockwashers (7), and washers (8) that secure control box to bracket (9).

6. Detach inverter / converter (5) from bracket (9) by removing two screws (10), lockwashers (11), and washers (12).

7. Release inverter / converter (5) from rear wall of enclosure (13) by removing six screws (14), lockwashers (15), and washers (16).

8. Remove bracket (17) from skid base by removing four screws (18), lockwashers (19), and washers (20).

9. Remove bracket (17) from power inverter / converter (5) by removing two screws (21), lockwashers (22), and washers (23).

10. Carefully lift inverter / converter (5) up and out of generator set enclosure.

4-52. POWER INVERTER / CONVERTER MAINTENANCE - cont.

B. INSPECTION.

1. Inspect power inverter / converter for obvious damage. Inspect for corrosion and evidence of electrical short. Check air ducts for clogs or obstructions. Clear obstructions.

2. Inspect electrical wiring for cuts, crimps, bare wire, or other damage. Ensure terminal lugs are securely attached.

3. Repair of the power inverter / converter is limited to removal and replacement of the assembly. All adjustments are factory set and may not be altered.

4. Remove and replace any component that is damaged to the extent that it will effect the safe operation of the generator set.

C. INSTALLATION.

1. Carefully install power inverter / converter (5, Figure 4-47) into generator set enclosure.

2. Install bracket (17) onto inverter / converter (5) using two screws (21), lockwashers (22), and washers (23). Secure bracket to skid base using four screws (18), lockwashers (19), and washers (20).

3. Mate inverter / converter (5) to rear wall of enclosure (13). Secure using six screws (14), lockwashers (15), and washers (16).

4. Attach inverter / converter (5) to bracket (9) using two screws (10), lockwashers (11), and washers (12).

5. Secure control box to bracket (9) using two screws (6), lockwashers (7), and washers (8).

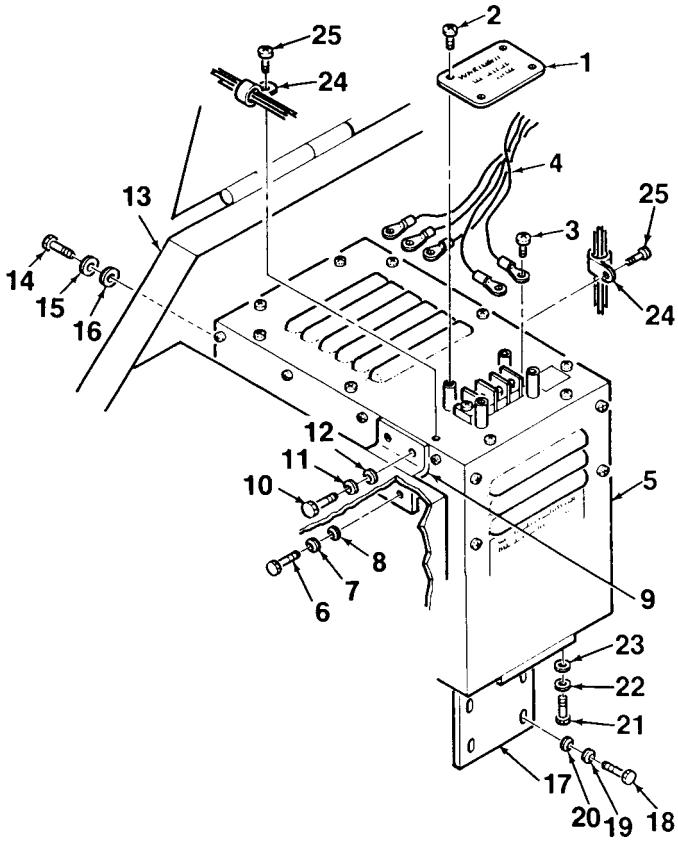

Figure 4-47. Power Inverter / Converter (Sheet 1 of 2)

4-52. POWER INVERTER / CONVERTER MAINTENANCE - cont.

6. Connect electrical harness connector J7 to rear of control box. Connect three electrical connectors to inverter / converter (5).

7. Connect electrical wires (4) using screws (3). Install cover plate (1) using four screw and captive washer assemblies (2).

8. Secure two wire clamps (24) to inverter / converter (5) using screws (25).

9. Install AC circuit interrupter contactors (Para. 4-28).

10. Close main access cover and lock in place using latches.

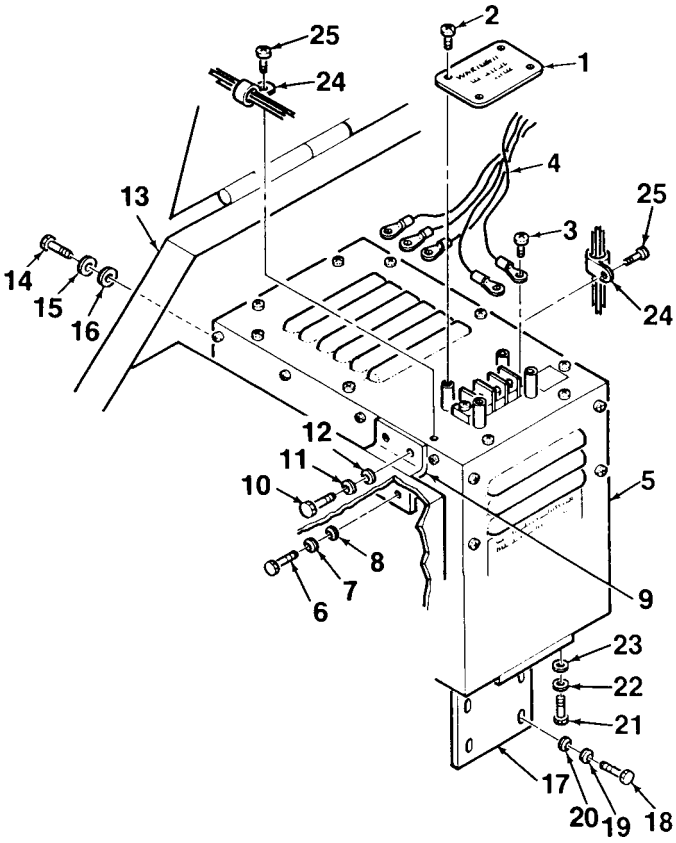

Figure 4-47. Power Inverter / Converter (Sheet 2 of 2)

This page
Intentionally
Left blank

4-53. DC MAGNETIC CONTACTOR MAINTENANCE

This task covers removal, inspection, and installation.

INITIAL SETUP

Tools:
Tool Kit, General Mechanic's Automotive (Item 2, App. B, Sect. III)

Equipment Condition:
Generator set shut down (Para. 2-9)
Battery cables disconnected
Cable disconnected for SLAVE RECEPTACLE

A. REMOVAL.

1. Unlock main access cover latches and lift cover to open.

2. Remove two DC magnetic contactors (7, Figure 4-48) from wall of enclosure (8) by removing screws (9), washers (10), and locknuts (11).

3. Tag and disconnect electrical wires (1, 2) from DC magnetic contactors (7) by removing nuts (3, 5) and washers (4, 6). Remove voltage suppressors (12).

B. INSPECTION.

1. Inspect DC magnetic contactors for obvious damage. Inspect for corrosion and evidence of electrical short.

2. Inspect electrical wiring for cuts, crimps, bare wire, or other damage. Ensure terminal lugs are securely attached.

3. Remove and replace any component that is damaged to the extent that it will effect the safe operation of the generator set.

C. INSTALLATION.

1. Connect electrical wires (1, 2, Figure 4-48) and voltage suppressors (12) to DC magnetic contactors (7) using nuts (3, 5) and washers (4, 6).

2. Mate two DC magnetic contactors (7) to the rear wall of enclosure (8). Secure using screws (9), washers (10), and locknuts (11).

3. Close main access cover and lock in place using latches.

4-53. DC MAGNETIC CONTACTOR MAINTENANCE - cont.

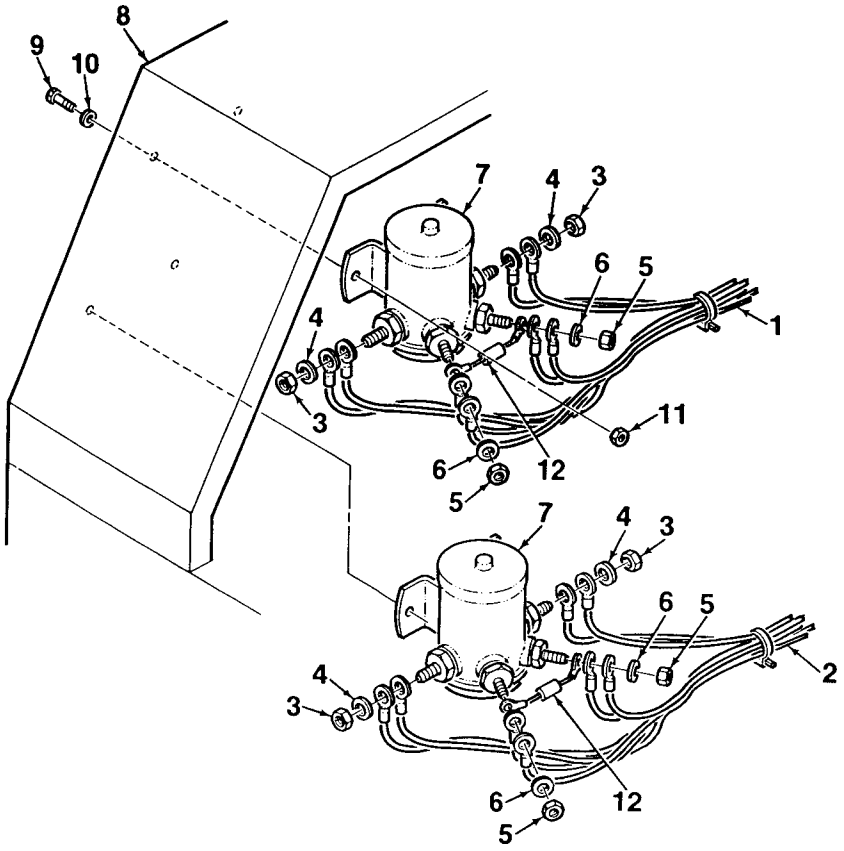

Figure 4-48. DC Magnetic Contactors

4-54. GOVERNOR ACTUATOR MAINTENANCE

This task covers adjustment, removal, disassembly, inspection, assembly, and installation.

INITIAL SETUP

Tools:
Tool Kit, General Mechanic's Automotive (Item 2, App. B, Sect. III)

Equipment Condition:
Generator set shut down (Para. 2-9)
Battery cables disconnected
Cable disconnected for SLAVE RECEPTACLE

A. GOVERNOR SYSTEM ADJUSTMENT.

1. Disconnect ball joint (1, Figure 4-49) on engine linkage from lever (2) on governor actuator by removing screw (3), lockwasher (4), and locknut (5).

2. Loosen locknut (12). Screw linkage rod (6) all the way into the ball joint (1), then back out 1/8 inch. The length of the rod from the centerline of ball joint (1) to the bottom of spherical nut (7) shall be 5 3/8 inches, minimum.

3. Connect ball joint (1) to lever (2) using screw (3), washer (4), and locknut (5). Ensure that the linkage and lever are in the same plane (vertical when viewed from control box end of generator set).

4. Check that lever (2) reaches its stop just prior to engine fuel lever (10) reaching its stop. This is done by pulling lever (2) to the maximum fuel position. Make sure that there is clearance (approximately 1/16 inch) between spherical nut (7) and spherical washer (8). Adjust clearance by turning rod (6) in or out of ball joint (1). Secure using locknut (9). Tighten locknut (12).

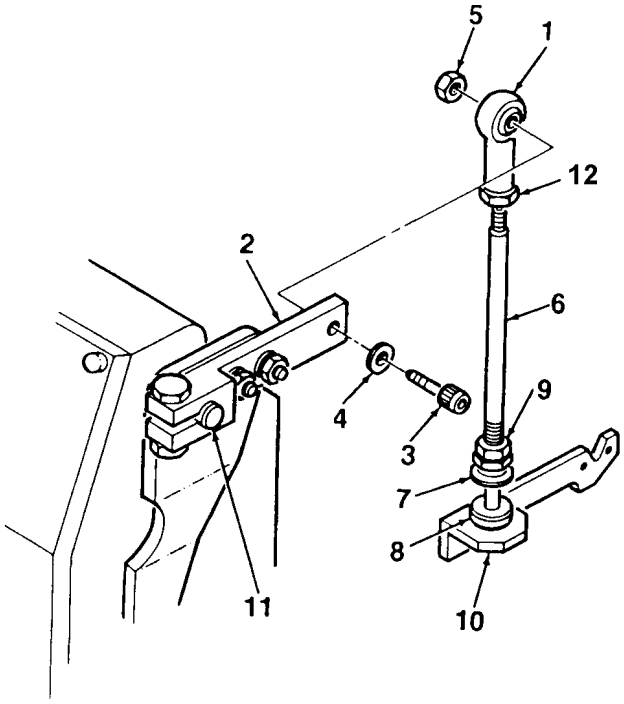

Figure 4-49. Governor Actuator Adjustment

4-54. GOVERNOR ACTUATOR MAINTENANCE - cont.

NOTE

If governor actuator linkage adjustment (steps 1 through 4) results in satisfactory operation, steps 5 through 15 are not required. Perform these procedures only if further adjustment is necessary.

5. Open the control box panel to gain access to the governor control module.

6. Set control module GAIN pot (2, Figure 4-50) and STABILITY pot (1) to the 9 o'clock position.

7. Connect a multimeter between control module terminals A and B.

8. Start the generator set (paragraph 2-8) and run in no load condition. Adjust control module SPEED pot (4) to obtain a PMA frequency of 254 Hz (3050 RPM). Clockwise rotation of the SPEED pot increases frequency. Counter-clockwise rotation decreases frequency.

9. With engine running, check the gap between lever target (19, Figure 4-51) and governor actuator magnet. Gap shall be 5/16 inch. Adjust gap by loosening locknut (23) and screwing linkage rod (22) in or out of ball joint (3). Check gap and tighten locknut (23).

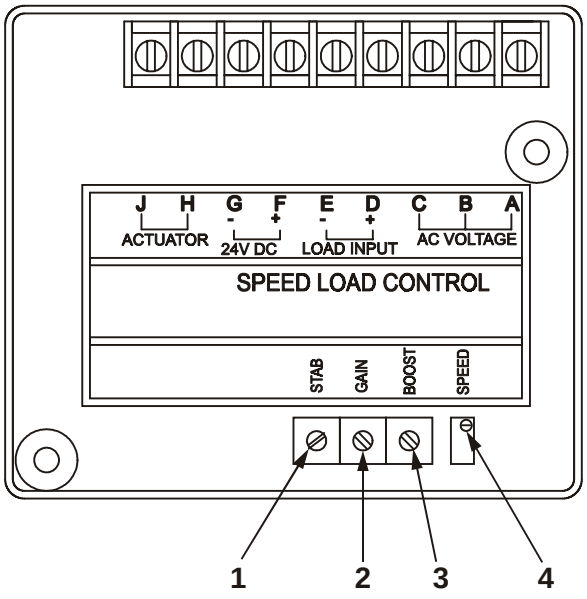

Figure 4-50. Governor Control Module

10. Rotate control module STABILITY pot (1, Figure 4-50) clockwise until engine becomes unstable, then counterclockwise until it stabilizes. Rotate an additional 5 degrees counterclockwise.

11. Rotate control module GAIN pot (2) clock clockwise until engine becomes unstable, then counterclockwise until it stabilizes. Rotate an additional 5 degrees counterclockwise.

12. Clock load contactor and apply full rated load. Adjust control module BOOST pot (3) to obtain a PMA frequency of 288 Hz (3450 RPM). Clockwise rotation of the BOOST pot decrease frequency. Counterclockwise rotation increases frequency.

4-54. GOVERNOR ACTUATOR MAINTENANCE - cont.

13. Check the no load to rated load operation by opening and closing the CIRCUIT INTERRUPTER switch and observing the actuator magnet and target. If the actuator magnet makes contact with the target (19, Figure 4-51) during the on/off load operation, reduce gain slightly by rotating GAIN pot (2, Figure 4-50) clockwise.

NOTE

When applying rated load the engine speed should increase without a large initial drop in engine speed. When removing load the engine speed should decrease without a large initial surge in speed.

14. At no load, lift actuator lever (4, Figure 4-51) and lock it in the manual start position. PMA frequency shall be 312.5 Hz (3750 RPM), minimum.

15. Shutdown generator set and disconnect multimeter. Close and lock control panel.

B. REMOVAL.

1. Unlock main access cover latches and lift cover to open.

2. Disconnect electrical plug (1, Figure 4-51) from governor actuator (2).

3. Disconnect ball joint (3) on engine linkage from lever (4) on governor actuator by removing screw (5), washer (6), and locknut (7).

4. Remove governor actuator (2) by removing two screws (8), lockwashers (9), and washers (10).

C. DISASSEMBLY.

1. Remove lever (17, Figure 4-51) from lever (4) by removing screw (11), washer (12), and nut (13).

2. Release lever (4) from governor actuator (2) by loosening screw (14), washer (15), and nut (16).

3. Remove screw (18), plate (19), washer (20), and nut (21) from lever (17).

4. Remove ball joint (3) from linkage rod (22). Remove nuts (23, 26, 27) and spherical washer (24). Remove link bracket (25) from engine only if replacement is required.

4-54. GOVERNOR ACTUATOR MAINTENANCE - cont.

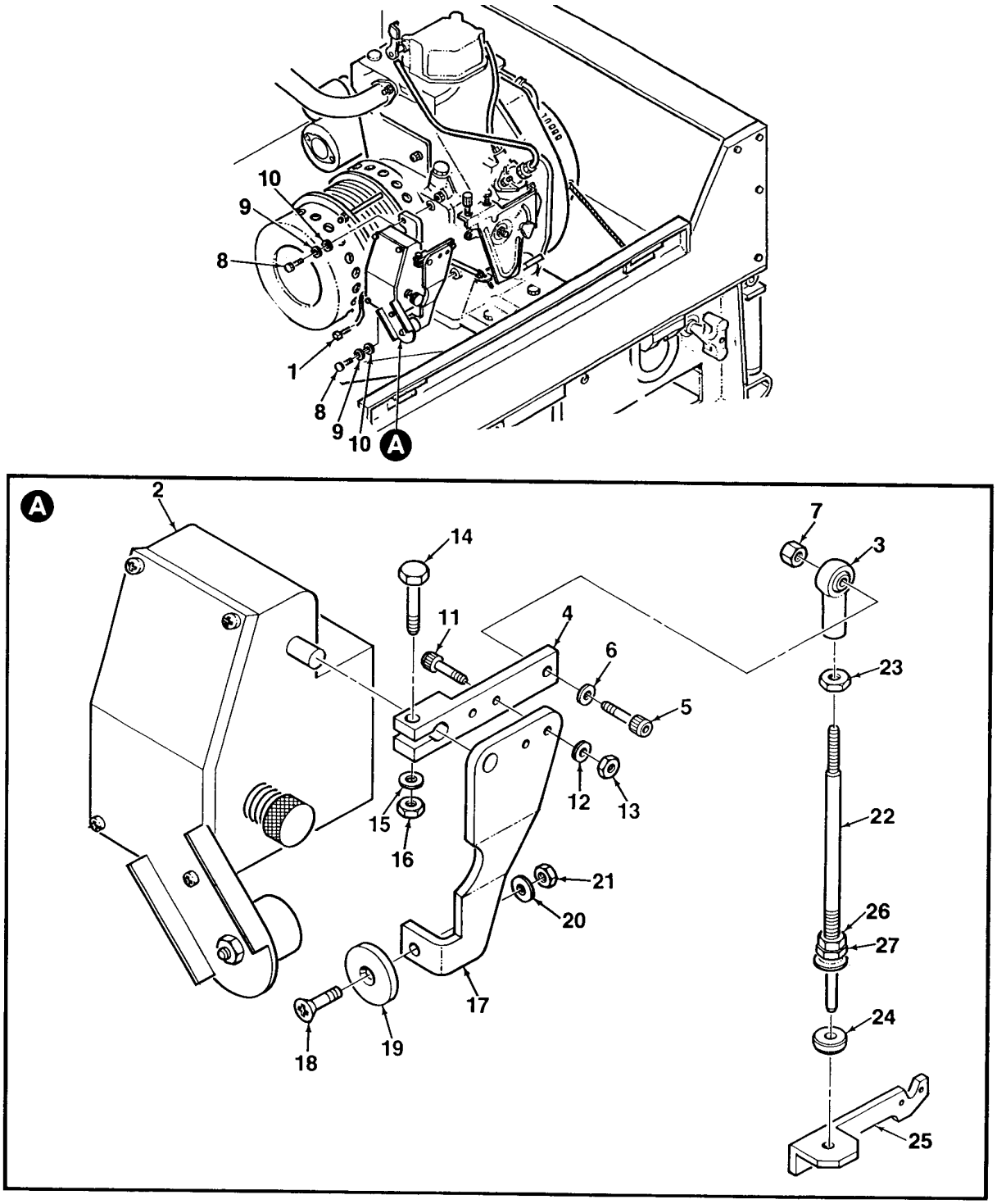

Figure 4-51. Governor Actuator
(Sheet 1 of 2)

4-54. GOVERNOR ACTUATOR MAINTENANCE - cont.

D. INSPECTION.

1. Inspect governor actuator for obvious damage. Inspect for corrosion and evidence of electrical short. Inspect linkage components for obvious damage or defects.

2. Inspect electrical wiring for cuts, crimps, bare wire, or other damage. Ensure connector plug is securely attached.

1. Remove and replace any component that is damaged to the extent that it will effect the safe operation of the generator set.

E. ASSEMBLY.

1. Install nuts (23, 26, 27, Figure 4-51), spherical washer (24), and ball joint (3) onto linkage rod (22). Attach link bracket (25) to engine.

2. Install screw (18), plate (19), washer (20), and nut (21) onto lever (17).

3. Mate levers (4) to governor actuator (2). Secure by tightening screw (14), washer (15), and nut (16).

4. Mate lever (17) to lever (4). Secure using screw (11), washer (12), and nut (13).

F. INSTALLATION.

1. Install governor actuator (2, Figure 4-51) using two screws (8), lockwashers (9), and washers (10).

2. Adjust actuator / governor linkage as required in accordance with step A, ADJUSTMENT.

10. Connect ball joint (3) on engine linkage with lever (4) using screw (5), washer (6), and locknut (7). Ensure that the linkage and actuator lever are in the same plane (vertical when viewed from control box end of generator set).

11. Connect electrical plug (1) to actuator (2).

12. Close main access cover and lock in place using latches.

4-54. GOVERNOR ACTUATOR MAINTENANCE - cont.

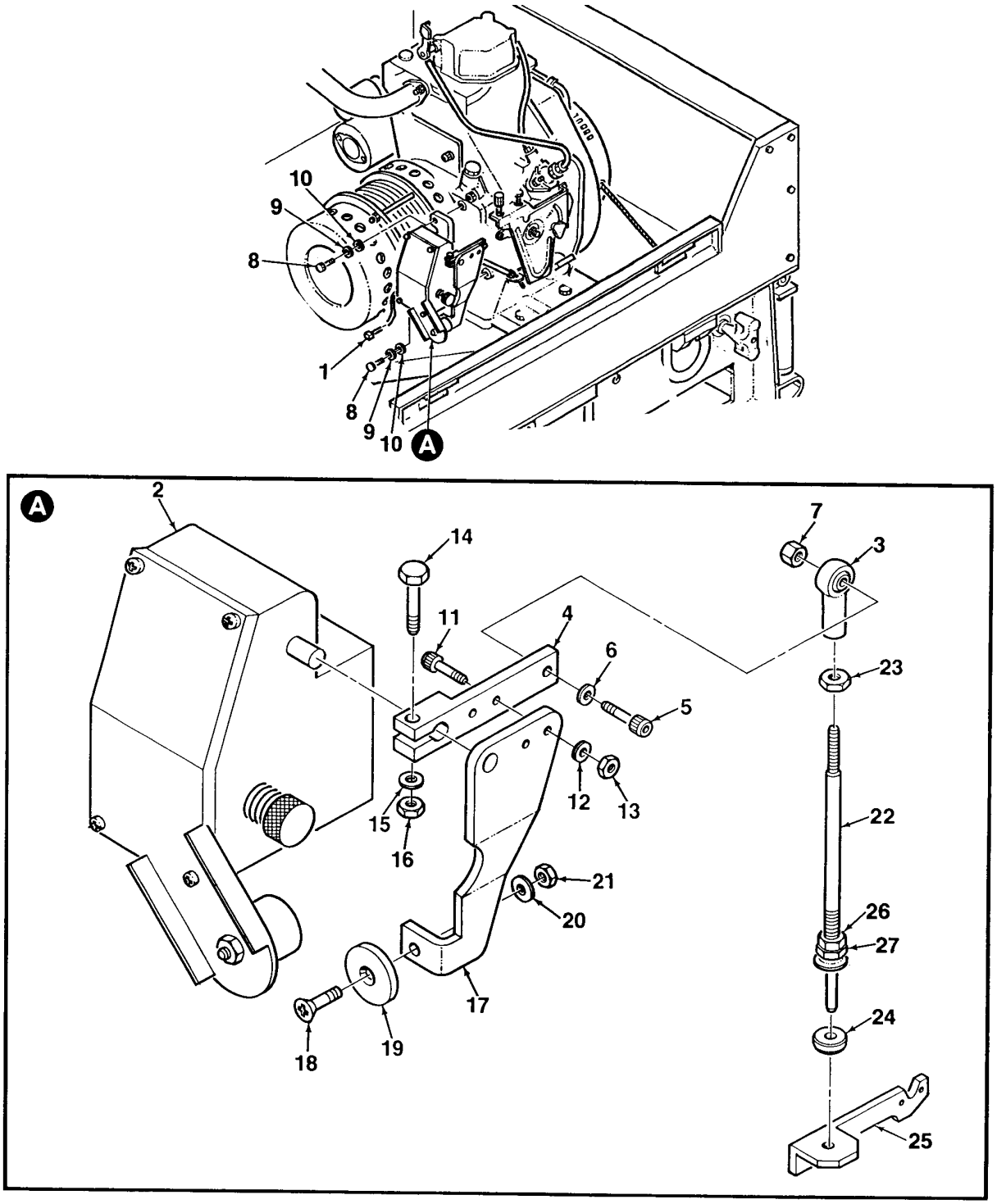

Figure 4-51. Governor Actuator
(Sheet 2 of 2)

Section VII. PREPARATION FOR SHIPMENT AND STORAGE

4-55. GENERAL.

This section provides instructions for short term and intermediate storage or shipment of the generator set.

4-56. ADMINISTRATIVE STORAGE.

Administrative storage shall be in accordance with AR 750-1.

4-57. SHORT TERM STORAGE (30 days or less).

a. Check engine oil level and service as required.

b. Conduct a general inspection of the unit to ensure all components are present and securely fastened. Close all doors and lids and lock in position.

c. Stow the generator set on a level surface in an area protected from the elements. Cover as required depending upon weather conditions.

4-58. INTERMEDIATE TERM STORAGE (more than 30 days).

a. Start the generator set and operate for 10 minutes at full speed to bring engine to normal operating temperature. Shutdown the generator set.

b. Drain the engine oil. Fill crankcase to proper level with preservative oil, MIL-L-21260 (Item 17, Appendix E).

c. Close air intake and exhaust openings with moisture proof tape, PPP-T-60 (Item 18, Appendix E).

d. Stow the generator set on a level surface in an area protected from the elements. Cover as required depending upon weather conditions.

e. Before returning generator set to service, drain preservative oil and service the engine.

4-59. SHIPMENT.

a. Close air intake and exhaust openings with moisture proof tape, PPP-T-60 (Item 18, Appendix E).

b. Attach to the generator set all forms, tags, and records applicable to the unit.

c. Load the generator set onto carrier and attach shipping tiedowns.

CHAPTER 5
DIRECT SUPPORT MAINTENANCE INSTRUCTIONS

Section I REPAIR PARTS; TOOLS; SPECIAL TOOLS; TEST, MEASUREMENT, AND DIAGNOSTIC EQUIPMENT (TMDE); AND SUPPORT EQUIPMENT 5-2

5-1 Common Tools and Equipment 5-2
5-2 Special Tools, TMDE, and Support Equipment 5-2
5-3 Repair Parts 5-2

Section II SERVICE UPON RECEIPT OF EQUIPMENT 5-2

5-4 General 5-2

Section III DIRECT SUPPORT LEVEL TROUBLESHOOTING PROCEDURES 5-3

5-5 General 5-3
5-6 Troubleshooting 5-3

Section IV DIRECT SUPPORT MAINTENANCE PROCEDURES 5-4

5-7 Engine / Alternator Assembly Maintenance 5-4
5-8 Permanent Magnet Alternator Maintenance 5-10
5-9 Fuel Tank Maintenance 5-14

Section I. REPAIR PARTS; TOOLS; SPECIAL TOOLS; TEST, MEASUREMENT, AND DIAGNOSTIC EQUIPMENT (TMDE); AND SUPPORT EQUIPMENT

5-1. COMMON TOOLS AND EQUIPMENT.

a. For authorized common tools and equipment, refer to the Modified Table of Organization and Equipment (MTOE), CTA 50-970, or CTA 8-100, as applicable to your unit.

b. Tool Kit, Master Mechanic, Supply Catalog SC5180-90-CL-N05, is the primary supply source for tools used in direct support maintenance of the generator set.

5-2. SPECIAL TOOLS, TMDE, AND SUPPORT EQUIPMENT.

Refer to TM 9-6115-639-23P, Generator Set Repair Parts and Special Tools List, for complete data on special tools and equipment required for generator set maintenance. Refer to the Maintenance Allocation Chart (MAC), Appendix B, for special tools and equipment used at the direct support maintenance level.

5-3. REPAIR PARTS.

a. Refer to Appendix H for a list of Mandatory Replacement Parts required for direct support level maintenance of the generator set.

b. Repair parts are listed and illustrated in TM 9-6115-639-23P, Generator Set Repair Parts and Special Tools List.

Section II. SERVICE UPON RECEIPT OF EQUIPMENT

5-4. GENERAL.

Refer to paragraph 2-6 for instructions on unpacking, assembly, and servicing of generator set components.

Section III. DIRECT SUPPORT LEVEL TROUBLESHOOTING PROCEDURES

5-5. GENERAL.

This section contains direct support level troubleshooting information for the generator set.

5-6. TROUBLESHOOTING.

a. Results of troubleshooting tests and inspections performed at the unit maintenance level (Chapter 4) are to be used in performing additional inspections at the direct support maintenance level. This chapter does not list all malfunctions noted in Chapter 4, all tests or inspections that may have been performed by unit level personnel, or all corrective actions taken for each malfunction.

b. Refer to the system electrical schematic (Figure FO-1), system wiring diagram (Figure FO-2), generator set wiring harness diagrams (Figures FO-3 and FO-4), and control panel wiring harness diagrams (Figures FO-5 and FO-6) for assistance in troubleshooting electrical components. Conduct continuity checks on suspect wiring / harnesses as required utilizing these schematics and diagrams.

c. Refer to TM 9-2815-257-24 for troubleshooting of the diesel engine and its components.

Section IV. DIRECT SUPPORT MAINTENANCE PROCEDURES

5-7. ENGINE / ALTERNATOR ASSEMBLY MAINTENANCE

This task covers removal, inspection, and installation.

INITIAL SETUP

Tools:
Tool Kit, Master Mechanic's
(Item 3, App. B, Sect. III)
Hoist, Lifting (Item 5, App. B, Sect. III)

Equipment Condition:
Generator set shut down (Para. 2-9)
Muffler assembly removed (Para. 4-43)

Personnel Required:
Two (2) maintenance personnel

A. REMOVAL.

1. Disconnect two cover supports from main access cover (Para. 4-46). Fully open access cover.

2. Tag and disconnect electrical wiring from engine components, including the oil pressure switch, starter (positive terminal), and two air heater plugs. Refer to Figures FO-3 and FO-4 for wire locations.

3. Disconnect fuel return line (1, Figure 5-1) from fuel injector. Disconnect fuel line (2) from fuel tank to tee. Disconnect fuel line (3) from fuel filter / water separator outlet.

4. Disconnect oil drain line (4) from oil drain valve (12) by loosening clamp (13).

WARNING

The engine / alternator assembly is heavy. Provide adequate lifting device to support the weight. Do not lift object over personnel. Enlist the help of an aide to prevent damage to equipment. Failure to observe this warning can result in personal injury.

5. Attach lifting hoist to engine lifting cable (10). Raise hoist to remove slack.

6. Release engine / alternator assembly (23) from three vibration isolators (14) by removing screws (15), lockwashers (16), and washers (17).

5-7. ENGINE / ALTERNATOR ASSEMBLY MAINTENANCE - cont.

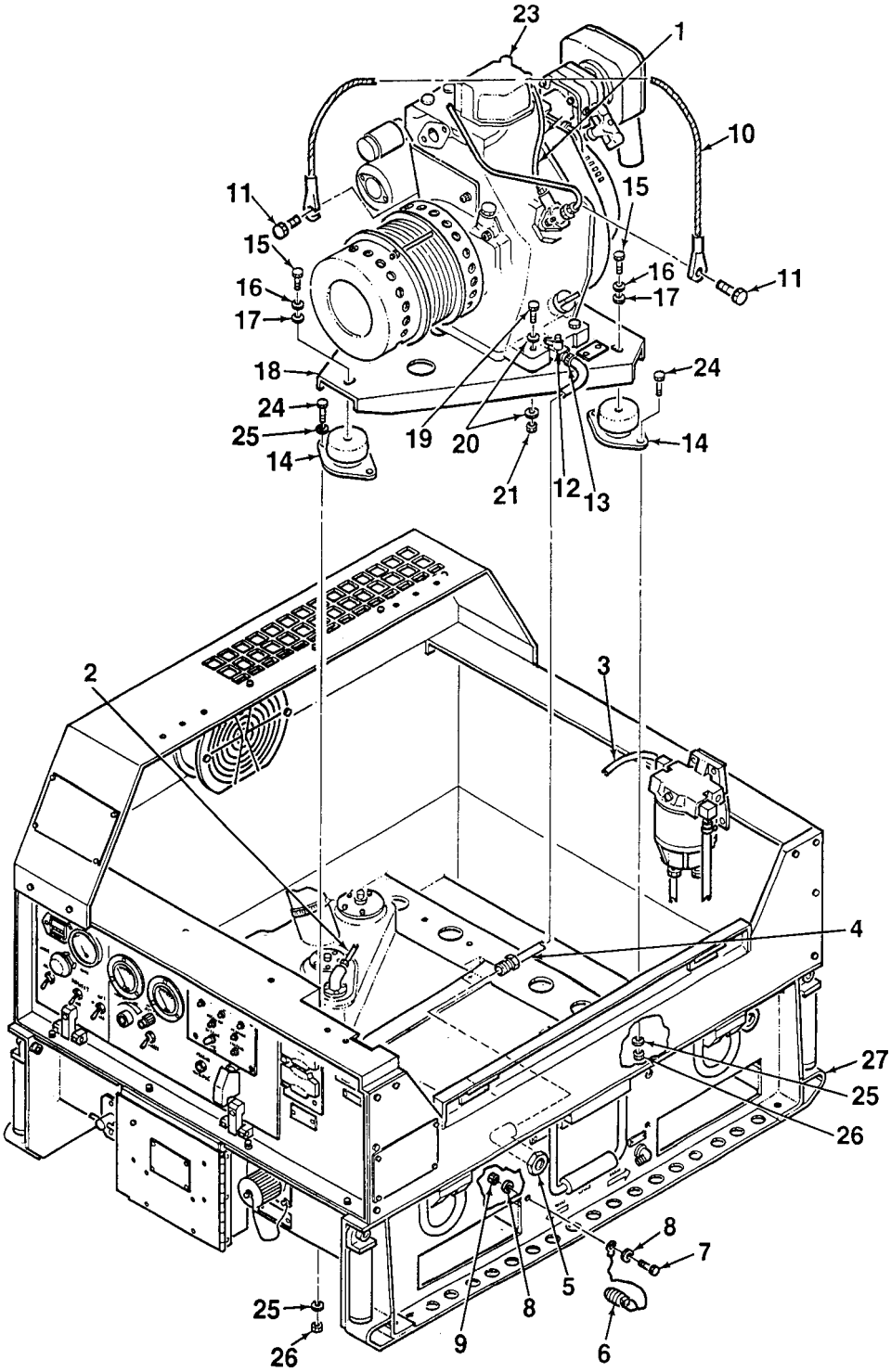

Figure 5-1. Engine / Alternator Assembly (Sheet 1 of 3)

5-7. ENGINE / ALTERNATOR ASSEMBLY MAINTENANCE

CAUTION

End of starter rope can be quickly drawn into recoil winding mechanism, making it difficult to remove. To prevent this, ensure end of starter rope is knotted or otherwise secured after removing tee handle.

7. Disconnect tee handle from starter pull rope by removing knot. Feed end of rope through hole in skid base (27).

8. Carefully lift engine / alternator assembly (23) up and out of generator set enclosure. Place on a flat work surface for further maintenance. If engine is to be replaced, remove lifting cable (10) by removing screws (11), lockwasher (12), and washer (13). Retain for future use.

9. If required, remove engine / alternator assembly (23) from base (18) by removing four screws (19), eight washers (20), and four nuts (21).

10. Remove three vibration isolators (14) from skid base (27) by removing screws (24), washers (25), and nuts (26).

11. If engine is being replaced, remove and retain the following engine components for use on the new engine: engine air filter assembly, engine oil drain valve, governor actuator, and engine lifting cable.

B. INSPECTION.

1. Inspect engine and alternator for obvious damage. Clean as required to view all components carefully. Look for signs of fluid leakage. Check all sealing areas and surfaces.

2. Inspect engine fuel and oil lines for cracks, cuts, abrasions, evidence of leakage, and obvious damage. Check fluid fittings and connectors for security of attachment.

3. Inspect electrical wiring for cuts, crimps, bare wire, or other damage. Inspect wiring insulation for damage. Ensure all connectors and terminal lugs are securely attached.

4. Conduct a detailed inspection of suspect components in accordance with the appropriate maintenance paragraph.

5. Remove and replace any component that is damaged to the extent that it will effect the safe operation of the generator set.

5-7. ENGINE / ALTERNATOR ASSEMBLY MAINTENANCE - cont.

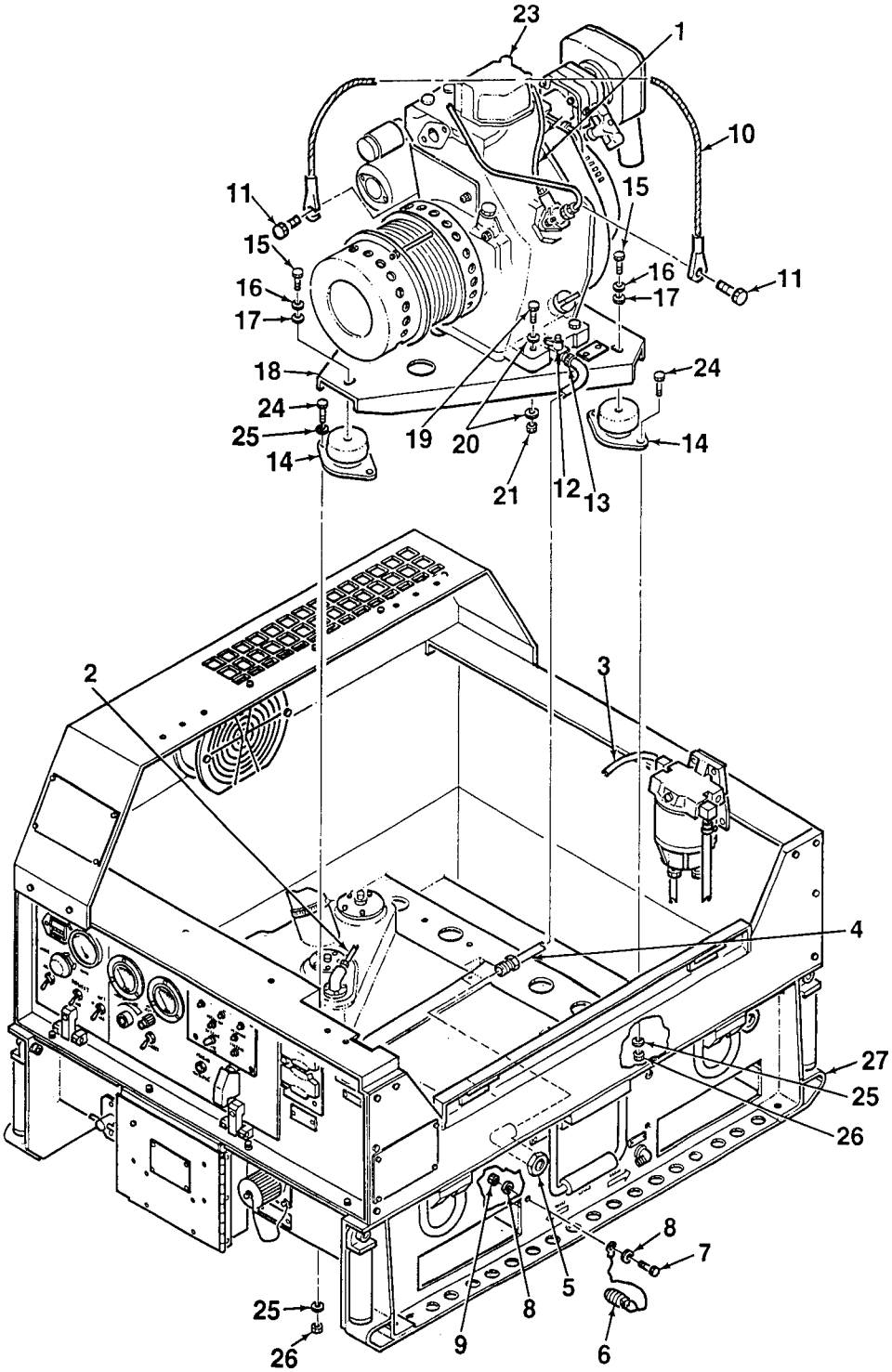

Figure 5-1. Engine / Alternator Assembly (Sheet 2 of 3)

5-7. ENGINE / ALTERNATOR ASSEMBLY MAINTENANCE - cont.

C. INSTALLATION.

WARNING

The engine / alternator assembly is heavy. Provide adequate lifting device to support the weight. Do not lift object over personnel. Enlist the help of an aide to prevent damage to equipment. Failure to observe this warning can result in personal injury.

1. Install engine lifting cable (10, Figure 5-1) onto engine / alternator assembly (23) using screws (11).

2. Attach lifting hoist to engine lifting cable (10, Figure 5-1). Raise hoist to remove slack.

3. Carefully lift engine / alternator assembly (23) and mate to plate (18). Secure using four screws (19), eight washers (20), and four nuts (21). Torque screws to 30 ft-lbs.

4. Install three vibration isolators (14) to skid base (27) using screws (24), washers (25), and nuts (26).

5. Lift engine / alternator assembly (23) and carefully lower into generator set enclosure. Mate mounting holes on plate (18) with vibration isolators (14).

6. Attach engine / alternator assembly (23) to vibration isolators (14) using screws (15), lockwashers (16), and washers (17). Torque screws to 30 ft-lbs.

7. Connect oil drain line (4) to drain valve (12) and secure by tightening clamp (13). If removed, secure drain plug (6) to skid base (27) using screw (7), washers (8), and nut (9).

8. Feed recoil winding mechanism starter rope through hole in skid base (27). Install tee handle and knot rope to secure handle.

9. Connect fuel line (3) to fuel filter / water separator outlet. Connect fuel line (2) from fuel tank to tee. Connect fuel return line (1) to fuel injector.

10. Connect electrical wiring to engine components.

11. Attach support rods to main access cover (4-46).

12. Install muffler assembly (Para. 4-43).

5-7. ENGINE / ALTERNATOR ASSEMBLY MAINTENANCE - cont.

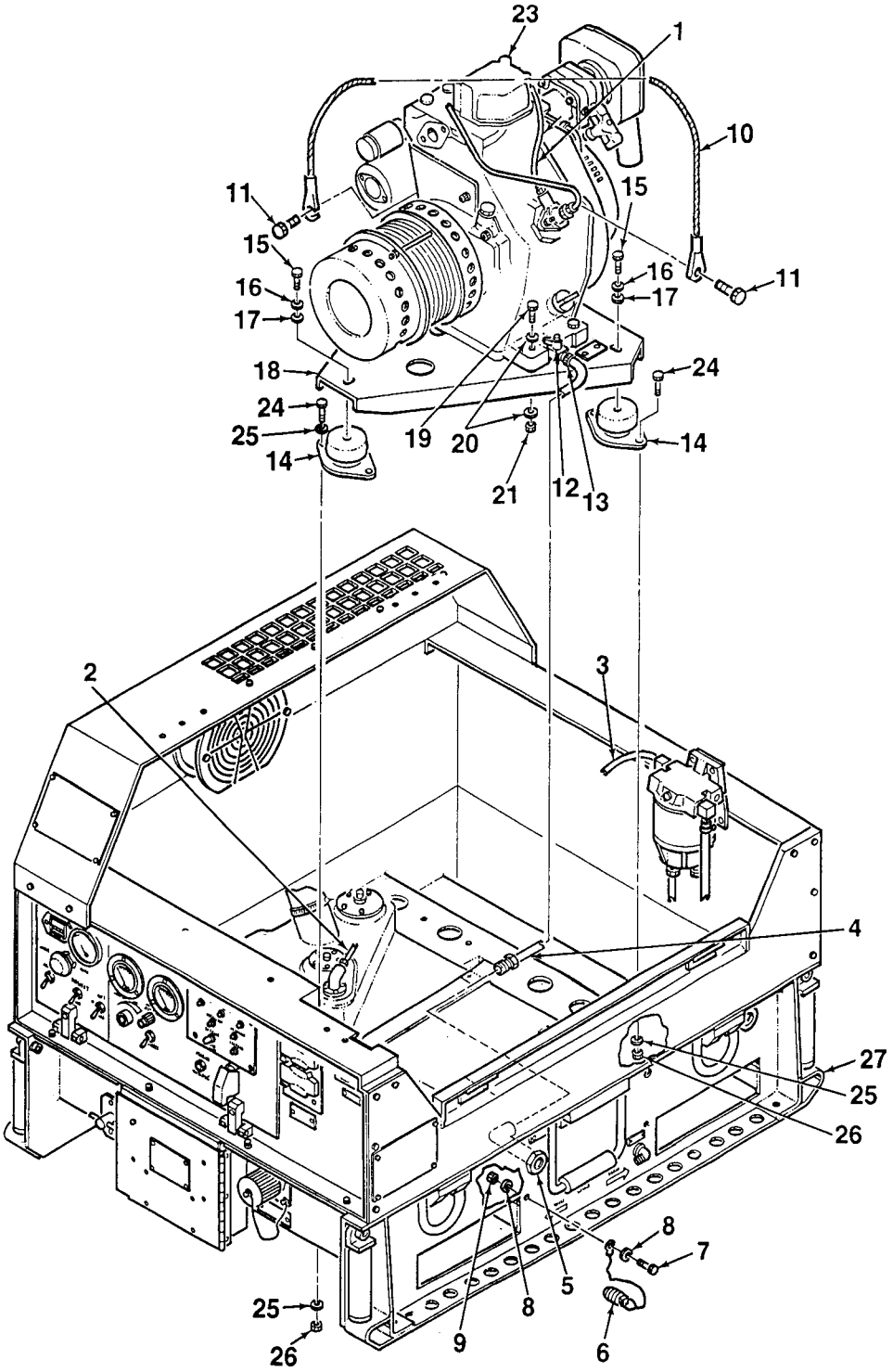

Figure 5-1. Engine / Alternator Assembly
(Sheet 3 of 3)

5-8. PERMANENT MAGNET ALTERNATOR MAINTENANCE

This task covers removal, inspection, and installation.

INITIAL SETUP

Tools:
- Tool Kit, Master Mechanic's (Item 3, App. B, Sect. III)
- Shop Equipment, Automotive Maintenance (Item 4, App. B, Sect. III)
- Puller, Mechanical (Item 6, App. B, Sect. III)

Equipment Condition:
- Generator set shut down (Para. 2-9)
- Battery cables disconnected
- Cable disconnected for SLAVE RECEPTACLE

Parts/Materials:
- Adhesive, Loctite (Item 16, App. E)

A. REMOVAL.

1. Tag and disconnect alternator output leads (1, 2, 3, 4, Figure 5-2).

2. Using a #4 metric allen wrench, remove cover (5) by removing six screws (6). Use care when removing cover to prevent damage to alternator output leads.

NOTE

Rotor assembly (11) is held in stator (14) by magnets. The rotor assembly must be completely removed from stator, or magnets will pull it back into place.

3. Release rotor assembly (11) from engine shaft by removing screw (9) and washer (10). Using a mechanical puller, remove rotor assembly (11) completely from stator (14).

4. Loosen clamping ring (13). Remove stator (14) from engine adapter (18) by removing six screws (12).

5. Remove engine adapter (18) from engine by removing four screws (15), lockwashers (16), and washers (17).

B. INSPECTION.

1. Inspect alternator components for obvious damage. Clean as required to view all components carefully. Look for signs of excessive wear or electrical short.

2. Inspect electrical wiring for cuts, crimps, bare wire, or other damage. Inspect wiring insulation for damage. Ensure all connectors and terminal lugs are securely attached.

3. Inspect all components for corrosion. Check attaching parts for crossed, stripped, or damaged threads.

4. Inspect edge gasket (8) for damage. Inspect label (7) for legibility. Replace as required.

5. Remove and replace any component that is suspect.

5-8. PERMANENT MAGNET ALTERNATOR MAINTENANCE - cont.

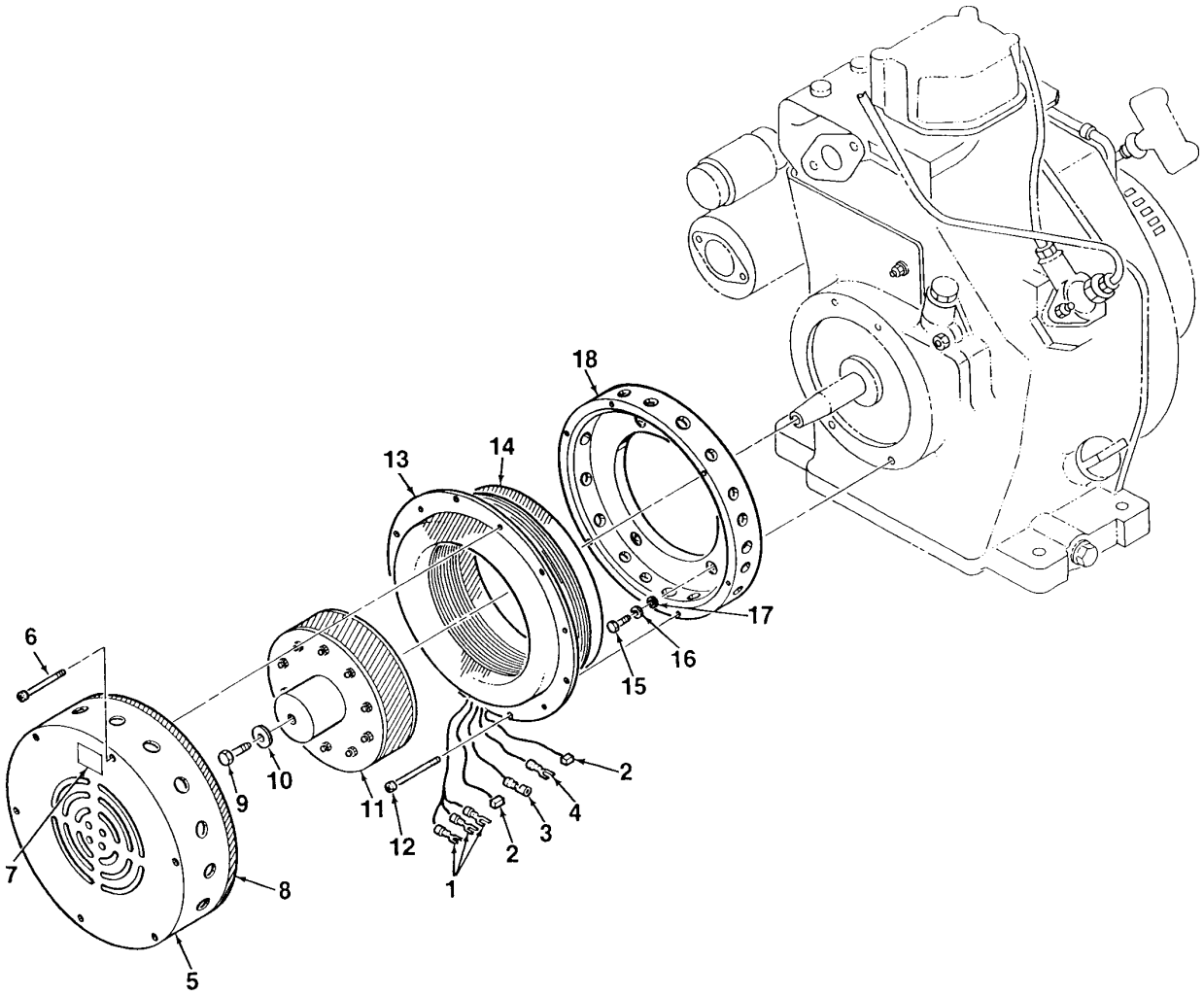

Figure 5-2. Permanent Magnet Alternator
(Sheet 1 of 2)

5-8. PERMANENT MAGNET ALTERNATOR MAINTENANCE - cont.

C. INSTALLATION.

1. Apply loctite to threads of four screws (15, Figure 5-2). Install engine adapter (18) onto engine using screws (15), lockwashers (16), and washers (17). Torque screws to 15 ft-lbs.

2. Install stator (14) into engine adapter (18). Stator must be installed so that the alternator output leads (1, 2, 3, 4) are at the bottom, positioned for their exit through cover (5). Secure stator (14) using six screws (12) and clamping ring (13).

WARNING

Rotor assembly (11) is held in stator (14) by magnets. Rotor will snap into place in stator when installed. Use care to prevent injury to fingers.

3. Hold rotor assembly (11) so that no part of your fingers will be between the rotor and stator (14). Carefully insert rotor assembly (11) into stator (14). The rotor will cock slightly as it is drawn into the stator and stick in place. Using a rubber hammer, lightly tap the high side of the rotor until it slams into place.

4. Apply loctite to threads of screw (9). Install screw (9) and washer (10). Torque screw to 15 ft-lbs.

5. Using a feeler gage, check that clearance between rotor assembly (11) and stator (14) is 0.010 inch (minimum) at all points. If clearance is less than 0.010 inch, remove rotor assembly (11) and reinstall.

6. Feed alternator output leads (1, 2, 3, 4) through cover (5). Leads must exit cover without the possibility of abrasion. Secure cover (5) using six screws.

5-8. PERMANENT MAGNET ALTERNATOR MAINTENANCE - cont.

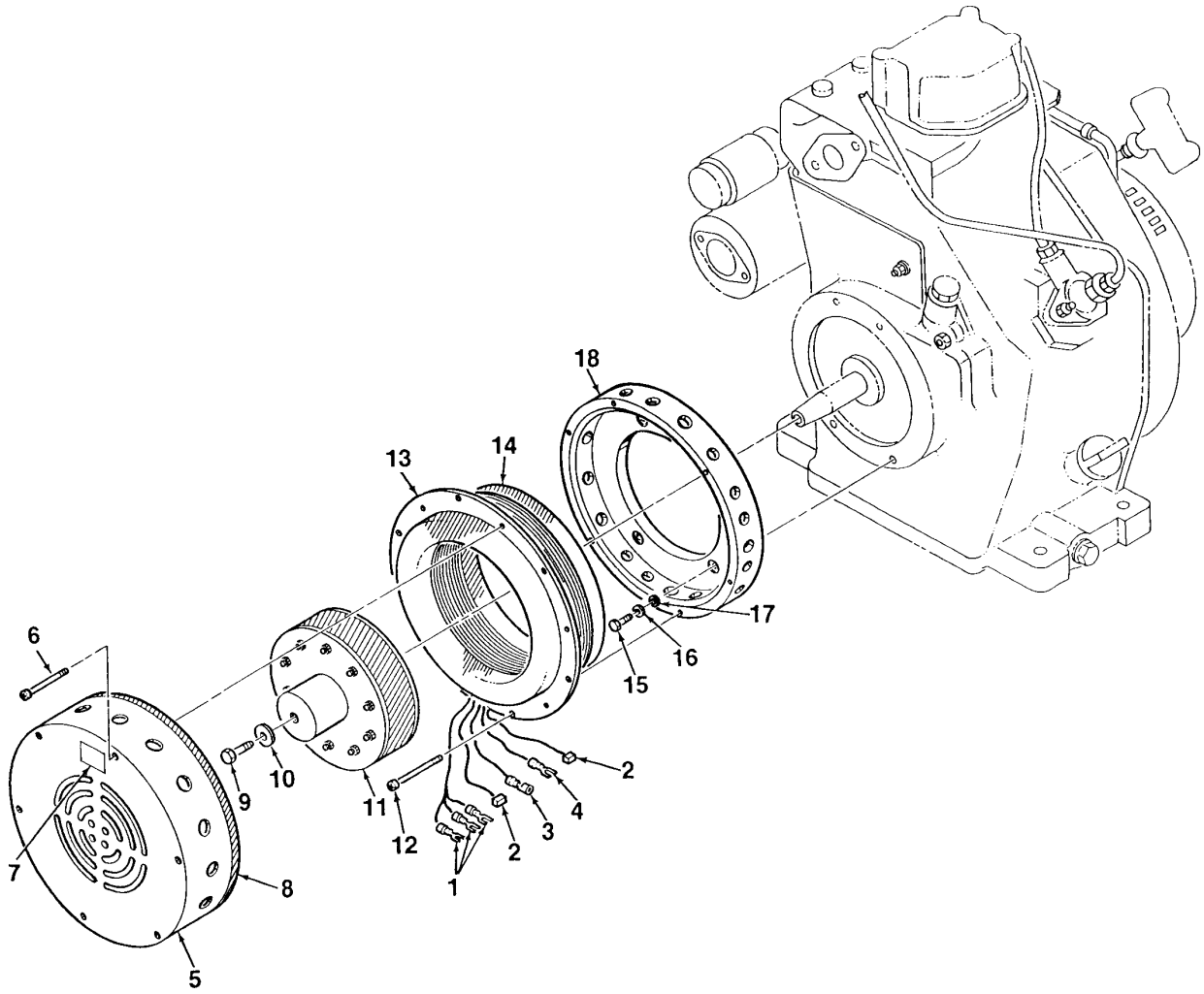

Figure 5-2. Permanent Magnet Alternator
(Sheet 2 of 2)

5-9. FUEL TANK MAINTENANCE

This task covers removal, inspection, and installation.

INITIAL SETUP

Tools:
Tool Kit, Master Mechanic's
(Item 3, App. B, Sect. III)

Equipment Condition:
Engine / Alternator assembly removed
(Para. 5-7)
Auxiliary fuel pump removed (Para. 4-51)

A. REMOVAL.

1. Place a suitable container (4 gallon capacity) beneath fuel drain. Open drain valve (1, Figure 5-3) and drain fuel into container. Close drain valve.

2 Tag and disconnect electrical wiring from fuel tank components.

3. Remove jam nut (3) and washer (4) from hold down bracket (2). Carefully pry pin (5) from pin well to remove hold down bracket.

4. Disconnect fuel drain line (6) from bulkhead fitting (8). Remove bulkhead fitting, elbow (9), and nut (10).

5. Disconnect fuel return line (11) from fitting (12) by loosening hose clamp (13). Disconnect opposite end of line (to fuel injector) from tee.

6. Remove rubber hose (15) from fuel tank filler neck and fuel pocket (16) by loosening clamps (17, 18).

7. Remove tank bracket (22) from skid base by removing screws (19), lockwashers (20), and washers (21).

8. Slide fuel tank (14) towards drain valve (1) and lift rear of tank to remove from skid base.

9. Disconnect fuel drain line (6) from elbow (7). Remove elbow (7), drain valve (1), and fitting (12) from fuel tank (14).

B. INSPECTION.

1. Inspect fuel tank for cracks, dents, cuts, or evidence of leakage. Inspect for corrosion.

2. Inspect fuel hoses for cuts, cracks, or other damage. Check for deterioration.

3. Inspect fuel fittings for crossed, stripped, or damaged threads.

4. Remove and replace any component that is damaged to the extent that it will effect the safe operation of the generator set.

5-9. FUEL TANK MAINTENANCE - cont.

C. INSTALLATION.

1. Install drain valve (1, Figure 5-3), elbow (7), and fitting (12) into fuel tank (14). Connect fuel drain line (6) to elbow (7).

2. Place fuel tank (14) into skid base and slide into place. Secure tank bracket (22) using screws (19), lockwashers (20), and washers (21). Torque screws to 30 ft-lbs.

3. Connect rubber hose (15) between fuel tank filler neck and fuel pocket (16). Tighten clamps (17, 18).

4. Connect fuel return line (11) to fitting (12) and tighten hose clamp (13). Connect opposite end of line (to fuel injector) to tee.

5. Install bulkhead fitting (8), elbow (9), and nut (10) onto skid base. Connect drain hose (6) to fitting (8).

6. Install hold down bracket (2) using jam nut (3), washer (4), and pin (5).

7. Connect electrical wiring to fuel tank components.

8. Install engine / alternator assembly (Para. 5-7). Install auxiliary fuel pump (Para. 4-51).

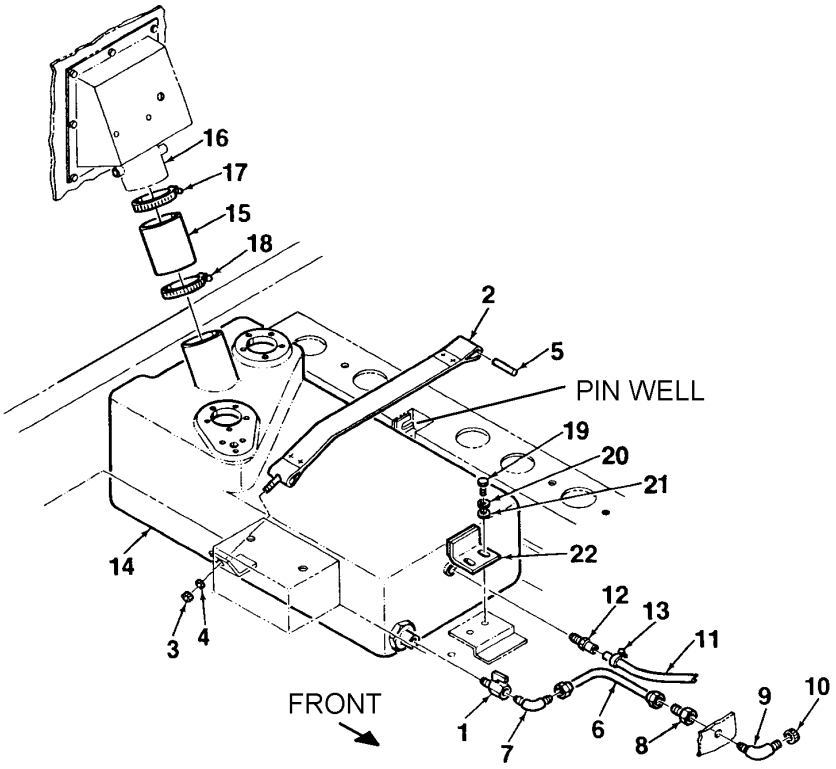

Figure 5-3. Fuel Tank

This page
Intentionally
Left blank

APPENDIX A

REFERENCES

A-1. Scope.

This appendix lists all forms, field manuals, and technical manuals referenced in this manual or used in conjunction with the generator set.

Forms

Recommended Changes to Publications	DA Form 2028
Recommended Changes to Equipment Technical Manuals	DA Form 2028-2
Equipment Inspection and Maintenance Worksheet	DA Form 2404
Product Quality Deficiency Report	DA Form 368
Transportation and Travel Record of Transportation Discrepancies	MCO P4610.19
Report of Item and Packaging Discrepancies	MCO 4430.0
Quality Deficiency Reports	MCO 4855.10
Recommended Changes to Technical Publications	NAVMC 10772

Field Manuals

First Aid for Soldiers	FM 21-11
Electric Power Generation in the Field	FM 20-31
Chemical and Biological Contamination Avoidance	FM 3-3
NBC Contamination	FM 3-4
NBC Decontamination	FM 3-5

Painting Requirements

Color, Marking, and Preparation of Equipment for Shipment	AR 740-1
Color and Marking of Army Material	AR 746-5

Technical Bulletins

Noise and Conservation of Hearing	TB MED 251
Hand Portable Fire Extinguishers Approved for Army Use	TB 5-4200-200-10
Specification List of Standard Liquid Fuels, Lubricants, Preservatives, and Related Products Authorized for Use by US Army	TB 703-1

Technical Manuals

The Army Maintenance Management System (TAMMS)	DA PAM 738-750
Ground Equipment Record Procedures	TM 4700-15/1
Administrative Storage of Equipment	TM 740-90-1
Procedures for Destruction of Equipment to Prevent Enemy Use	TM 750-244-3
Unit, Direct Support, and General Support Maintenance Manual, Diesel Engine Assembly	TM 9-2815-257-24
Unit, Direct Support, and General Support Repair Parts and Special Tools List (RPSTL), Diesel Engine Assembly	TM 9-2815-257-24P
Unit, Direct Support, and General Support Repair Parts and Special Tools List (RPSTL), Generator Set	TM 9-6115-639-23P
Corrosion Prevention, Painting and Marking of USAF Support Equipment (SE)	TO 35-1-3
Processing and Inspection of Support Equipment for Storage and Shipment	TO 35-1-4

APPENDIX B

MAINTENANCE ALLOCATION CHART (MAC)

Section I. INTRODUCTION

B-1. General.

a. This section provides a general explanation of all maintenance and repair functions authorized at various maintenance categories.

b. The Maintenance Allocation Chart (MAC) in Section II designates overall authority and responsibility for the performance of maintenance functions on the identified end item or component. The application of the maintenance functions to the end item or component will be consistent with the capacities and capabilities of the designated maintenance levels, which are shown in the MAC in column (4) as:

Unit - includes two subcolumns, C (operator/crew) and O (unit) maintenance.

Direct Support - includes an F subcolumn.

General Support - includes an H subcolumn.

Depot - includes a D subcolumn.

c. Section III lists the tools and test equipment (both special tools and common tool sets) required for each maintenance function as referenced from Section II.

d. Section IV contains supplemental instructions and explanatory notes for a particular maintenance function.

B-2. Maintenance Functions. Maintenance functions are limited to and defined as follows:

a. **Inspect.** To determine the serviceability of an item by comparing its physical, mechanical, and/or electrical characteristics with established standards through examination (e.g., by sight, sound, or feel).

b. **Test.** To verify serviceability by measuring the mechanical, pneumatic, hydraulic, or electrical characteristics of an item and comparing those characteristics with prescribed standards.

c. **Service.** Operations required periodically to keep an item in proper operating condition; e.g., to clean (includes decontaminate, when required), to preserve, to drain, to paint, or to replenish fuel, lubricants, chemical fluids, or gases.

d. **Adjust**. To maintain or regulate, within prescribed limits, by bringing into proper position, or by setting the operating characteristics to specified parameters.

e. **Align.** To adjust specified variable elements of an item to bring about optimum or desired performance.

f. **Calibrate.** To determine and cause corrections to be made or to be adjusted on instruments or test, measuring, and diagnostic equipment used in precision measurement. Consists of comparisons of two instruments, one of which is a certified standard of known accuracy, to detect and adjust any discrepancy in the accuracy of the instrument being compared.

g. **Remove/Install.** To remove and install the same item when required to perform service or other maintenance functions. Install may be the act of emplacing, seating, or fixing into position a spare, repair part, or module (component or assembly) in a manner to allow the proper functioning of an equipment or system.

h. **Replace.** To remove an unserviceable item and install a serviceable counterpart in its place. "Replace" is authorized by the MAC and assigned maintenance level is shown as the 3rd position code of the SMR code.

i. **Repair.** The application of maintenance services(1) including fault location/troubleshooting(2), removal/installation, and disassembly/assembly(3) procedures, and maintenance actions(4) to identify troubles and restore serviceability to an item by correcting specific damage, fault, malfunction, or failure in a parts, subassembly, module (component or assembly), end item, or system.

j. **Overhaul.** That maintenance effort (service/action) prescribed to restore and item to a completely serviceable/operational condition as required by maintenance standards in appropriate technical publications (i.e., DMWR). Overhaul is normally the highest degree of maintenance performed by the Army. Overhaul does not normally return an item to like new condition.

k. **Rebuild.** Consists of those services/actions necessary for the restoration of unserviceable equipment to a like new condition in accordance with original manufacturing standards. Rebuild is the highest degree of materiel maintenance applied to Army equipment. The rebuild operation includes the act of returning to zero those age measurements (e.g., hours/miles) considered in classifying Army equipment/components.

B-3. Explanation of Columns in the MAC, Section II.

a. **Column 1, Group Number.** Column 1 lists functional group code numbers, the purpose of which is to identify maintenance significant components, assemblies, subassemblies, and modules with the next higher assembly.

b. **Column 2, Component/Assembly.** Column 2 contains the item names of components, assemblies, subassemblies, and modules for which maintenance is authorized.

---

(1) Services - Inspect, test, service, adjust, align, calibrate, and/or replace.

(2) Fault location/troubleshooting - The process of investigating and detecting the cause of equipment malfunctioning; the act of isolating a fault within a system or unit under test (UUT).

(3) Disassembly/assembly - The step-by-step breakdown (taking apart) of a spare/functional group coded item to the level of its least component, that is assigned an SMR code for the level of maintenance under consideration (i.e., identified as maintenance significant).

(4) Actions - Welding, grinding, riveting, straightening, facing, machining, and/or resurfacing.

c. **Column 3, Maintenance Function.** Column 3 lists the functions to be performed on the item listed in Column 2. (For detailed explanation of these functions, see paragraph B-2).

d. **Column 4, Maintenance Level.** Column 4 specifies each level of maintenance authorized to perform each function listed in Column 3, by indicating work time required (expressed as man-hours in whole hours or decimals) in the appropriate subcolumn. This work-time figure represents the active time required to perform that maintenance function at the indicated level of maintenance. If the number or complexity of the tasks within the listed maintenance function vary at different maintenance levels, appropriate work-time figures are shown for each level. The work-time figure represents the average time required to restore an item (assembly, subassembly, component, module, end item, or system) to a serviceable condition under typical field operating conditions. This time includes preparation time (including any necessary disassembly/assembly time), troubleshooting/fault location time, and quality assurance time in addition to the time required to perform the specific tasks identified for the maintenance functions authorized in the maintenance allocation chart. the symbol designations for the various maintenance levels are as follows:

C Operator or crew maintenance
O Unit maintenance
F Direct support maintenance
L Specialized Repair Activity (SRA)(5)
H General support maintenance
D Depot maintenance

e. **Column 5, Tools and Test Equipment Reference Code.** Column 5 specifies, by code, the common tool sets (not individual tools), common TMDE, and special tools, special TMDE, and special support equipment required to perform the designated function. Codes are keyed to tools and test equipment in Section III.

f. **Column 6, Remarks.** When applicable, this column contains a letter code, in alphabetical order, which is keyed to the remarks contained in Section IV.

B-4. Explanation of Columns in Tool and Test Equipment Requirements, Section III.

a. **Column 1, Reference Code.** The tool and test equipment reference code correlates with a code used in the MAC, Section II, Column 5.

b. **Column 2, Maintenance Level.** The lowest level of maintenance authorized to use the tool or test equipment.

c. **Column 3, Nomenclature**. Name or identification of the tool or test equipment.

d. **Column 4, National Stock Number.** The National Stock Number of the tool or test equipment.

e. **Column 5, Tool Number.** The manufacturer's part number, model number, or type number.

---

(5) This maintenance level is not included in Section II, Column 4 of the MAC. Functions to this level of maintenance are identified by a work-time figure in the "H" column in Section II, Column 4, and an associated reference code is used in the Remarks column. This code is keyed to Section IV, remarks, and the SRA complete repair application is explained there.

B-5. Explanation of Columns in Remarks, Section IV.

a. **Column 1, Remarks Code.** The code recorded in Column 6, Section II.

b. **Column 2, Remarks.** This column lists information pertinent to the maintenance function being performed as indicated in the MAC, Section II.

Section II. MAINTENANCE ALLOCATION CHART FOR GENERATOR SET (3KW TQG, MEP 831A/832A)

(1)	(2)	(3)	(4) Maintenance Level					(5)	(6)
Group Number	Component/Assembly	Maintenance Function	Oper	Unit	Direct Support F	General Support H	Depot D	Tools and Equipment Ref Code	Remarks Code
00	GEN. SET, 3KW	INSPECT	0.5	0.1	0.4				A
		SERVICE	0.1	0.1				1, 2, 7	A, D
		ADJUST		0.5					
		TEST	0.1		0.8				
		REPAIR		0.8	1.2			1 - 6	
01	GENERATOR SET ASSY	INSPECT	0.4	0.1	0.4				A
		SERVICE	0.1	0.1				1, 2, 7	A, D
		ADJUST		0.5					
		TEST	0.1		0.8				
		REPAIR		0.8	1.2			1 - 6	
0101	CONTROL BOX ASSY	INSPECT	0.1	0.3					A
		TEST		0.3				1, 2	C
		REPAIR		0.5				1 - 4	E
		REM/INST		0.5				1, 2	
010101	CONTROL PANEL ASSY	INSPECT	0.1	0.3					A
		TEST		0.3				1, 2	C
		REM/INST		0.5				1, 2	
		REPAIR		0.5				1, 2	E
010102	WIRING HARNESS, CONTROL BOX	INSPECT	0.1	0.2				1, 2	A
		TEST		0.3				1, 2	C
		REM/INST		0.5				1, 2	
		REPAIR		0.5				1, 2	
0102	ENGINE / GEN / BASE ASSY	INSPECT	0.1	0.1	1.0				A
		SERVICE		0.2				1, 2	A, D
		REM/INST			8.0			3, 4, 5	
		REPAIR		1.5	1.8			1 – 4	E
010201	ENGINE, DIESEL	INSPECT	0.1	0.1					A
		SERVICE		0.2				1, 2	A, D
		REM/INST			6.0			3, 4, 5, 6	
		REPAIR		1.5	2.0			1 - 4	F
010202	ALTERNATOR, PERMANENT MAGNET, 3KW	INSPECT			0.2			1, 2	
		REM/INST			2.0			3, 4, 6	
		REPAIR			1.5			3, 4	E

(1)	(2)	(3)	(4) Maintenance Level					(5)	(6)
Group Number	Component/Assembly	Maintenance Function	Oper	Unit	Direct Support F	General Support H	Depot D	Tools and Equipment Ref Code	Remarks Code
010203	BATTERY CABLES	INSPECT	0.1	0.1					A
		REM/INST		0.3				1, 2	
		REPAIR		0.5				3, 4	
010204	LOAD WRENCH ASSY	INSPECT	0.1						
		REM/INST		0.3				1, 2	
		REPAIR		0.3				1, 2	E
010205	GOVERNOR ACTUATOR ASSY	INSPECT	0.1						
		REM/INST		0.5				1, 2	
		REPAIR		0.5				1, 2	E
0103	FAN, MODIFIED	INSPECT	0.1						
		REM/INST		0.5				1, 2	
		REPAIR		0.3				1, 2	E
0104	WIRING HARNESS, GENERATOR SET	INSPECT	0.1	0.1					A
		TEST		0.3				1, 2	C
		REM/INST		0.5				1, 2	
		REPAIR		0.5				1, 2	
0105	FUEL TANK	REM/INST			10.0			3, 4	
		SERVICE	0.1						A
		INSPECT	0.1						
		REPAIR		0.8				1, 2	E

Section III. TOOLS AND TEST EQUIPMENT FOR GENERATOR SET (3KW TQG, MEP 831A/832A)

Tool or Test Equipment Ref Code	Maintenance Level	Nomenclature	National Stock Number	Tool Number
1	O	SHOP EQUIPMENT, AUTOMOTIVE MAINTENANCE AND REPAIR	4910-00-754-0654	SC4910-95-CL-A74
2	O	TOOL KIT, GENERAL MECHANIC'S AUTOMOTIVE	5180-00-177-7033	SC5180-90-CL-N26
3	F	TOOL KIT, MASTER MECHANIC'S	5180-00-699-5273	SC5180-90-CL-N05
4	F	SHOP EQUIPMENT, AUTOMOTIVE MAINTENANCE AND REPAIR, FIELD BASIC, LESS POWER	4910-00-754-0705	SC4910-95-CL-A31
5	F	HOIST, 500 LB CAPACITY		
6	F	PULLER, MECHANICAL	5180-00-423-1596	GGG-P-781
7	F	TESTER, BATTERY ELECTROLYTE SOLUTION	6630-00-663-4501	TS765U

Section IV. REMARKS FOR GENERATOR SET (3KW TQG, MEP 831A/832A)

Remarks Code	Remarks
A	PREVENTIVE MAINTENANCE CHECKS AND SERVICES (PMCS)
B	TEST BY DEPRESSING SWITCH TO TEST INDICATOR LIGHTS
C	TROUBLESHOOTING TEST/CHECK USING MULTIMETER
D	SERVICE IN ACCORDANCE WITH LUBRICATION INSTRUCTIONS, CHAPTER 4, SECTION I
E	REPAIR IS LIMITED TO REPLACEMENT OF DAMAGED PARTS
F	REFER TO TM 9-2815-257-24 FOR ENGINE REPAIR

This page
Intentionally
Left blank

APPENDIX C

COMPONENTS OF END ITEM (COEI) AND BASIC ISSUE ITEMS (BII) LIST

Section I. INTRODUCTION

C-1. Scope.

This appendix list components of end item and basic issue items for the generator set to help you inventory the items for safe and efficient operation of the equipment.

C-2. General.

The Components of End Item (COEI) and Basic Issue Items (BII) lists are divided into the following sections:

a. **Section II, Components of End Item.** This listing is for information purposes only, and is not authority to requisition replacements. These items are part of the generator set. As part of the end item, these items must be with the end item whenever it is issued or transferred between property accounts. Items of COEI are removed and separately packaged for transportation or shipment only when necessary. Illustrations are furnished to help you find and identify the items.

b. **Section III, Basic Issue Items.** These essential items are required to place the generator set in operation, operate it, and to do emergency repairs. Although shipped separately packaged, BII must be with the generator set during operation and when it is transferred between property accounts. This list is your authority to request/requisition them for replacement based on authorization of the end item by the TOE/MTOE. Illustrations are furnished to help you find and identify the items.

C-3. Explanation of Columns.

a. **Column 1, Illus Number**, gives you the number of the item illustrated.

b. **Column 2, National Stock Number**, identifies the stock number of the item to be used for requisitioning purposes.

c. **Column 3, Description and Usable On Code**, identifies the Federal item name (in all capital letters) followed by a minimum description when needed. The last line below the description is the Commercial and Government Entity Code (CAGEC) (in parentheses) and the part number.

d. **Column 4, U/I (Unit of Issue)**, indicates how the item is issued for the National Stock Number shown in Column (2).

e. **Column 5, Qty Rqd**, indicates the quantity required.

Section II. COMPONENTS OF END ITEM

(1) Illus Number	(2) National Stock Number	(3) Description CAGEC and Part Number	(4) U/M	(5) Qty Rqr
		NOT APPLICABLE		

Section III. BASIC ISSUE ITEMS

(1) Illus Number	(2) National Stock Number	(3) Description CAGEC and Part Number	(4) U/M	(5) Qty Rqr
1	N/A	TECHNICAL MANUAL, TM 9-6115-639-13	EA	1
2	N/A	REPAIR PARTS AND SPECIAL TOOLS MANUAL, TM 9-6115-639-23P	EA	1
3	5975-00-878-3791	ROD, GROUND (82370) P/N A104	EA	1
4	4720-00-021-3320	HOSE ASSEMBLY, AUXILIARY FUEL (30554) P/N FA1493FFF3000	EA	1

APPENDIX D

ADDITIONAL AUTHORIZATION LIST (AAL)

Section I. INTRODUCTION

D-1. Scope.

This appendix lists additional items that you are authorized for the support of the generator set.

D-2. General.

This list identifies items that do not accompany the generator set and that do not have to be turned in with it. These items are all authorized by CTA, MTOE, TDA, or JTA.

D-3. Explanation of Listing.

National Stock Numbers, descriptions, and quantities are provided to help identify and request the additional items required to support the generator set. These items are listed in alphabetical sequence by item name under the type of document (ie, CTA, MTOE, TDA, or JTA) which authorizes the item(s).

Section II. ADDITIONAL AUTHORIZATION LIST

(1) National Stock Number	(2) Description CAGEC and Part Number	Usable On Code	(3) U/I	(4) Qty Reqd
7240-00-222-3088	CAN, FUEL, MILITARY		EA	1
4210-00-270-4512	EXTINGUISHER, FIRE, CARBON DIOXIDE (81348) P/N O-E-910		EA	1
5120-01-013-1676	SLIDE HAMMER, GROUND (97403) P/N 13226E7741		EA	1
7240-00-177-6154	SPOUT, CAN, FLEXIBLE		EA	1
2910-00-066-1235	ADAPTER, CONTAINER		EA	1

APPENDIX E

EXPENDABLE AND DURABLE ITEMS LIST

Section I. INTRODUCTION

E-1. Scope.

This appendix lists expendable and durable items that you will need to operate and maintain the generator set. This listing is for information only and is not authority to requisition the listed items. These items are authorized to you by CTA 50-790, Expendable/Durable Items (except medical, class V repair parts, and heraldic items), or CTA 8-100, Army Medical Department Expendable/Durable Items.

E-2. Explanation of Columns.

a. **Column 1, Item Number.** This number is assigned to the entry in the listing and is referenced in the narrative instructions to identify the item (e.g., Cleaning Compound (Item 5, App. E)).

b. **Column 2, Level.** This column identifies the lowest level of maintenance that requires the item.

c. **Column 3, National Stock Number.** This is the national stock number assigned to the item which you can use to requisition it.

d. **Column 4, Item Name, Description, CAGEC, Part Number.** This provides the other information you need to identify the item.

e. **Column 5, UM.** This code shows the physical measurement or count of an item, such as gallon, dozen, pound, or gross.

Section II. EXPENDABLE/DURABLE SUPPLIES AND REQUIREMENTS LIST

(1) Item Number	(2) Level	(3) National Stock Number	(4) Item Name, Description CAGEC, Part Number	(5) U/M
1	O, F	9150-00-402-2372	OIL, ENGINE, MIL-L-46167, OEA	QT
2	O, F	9150-00-491-7197	OIL, ENGINE, MIL-L-2104, OE/HDO-15/40	QT
3	O, F	9150-00-189-6727	OIL, ENGINE, MIL-L-2104, OE/HDO-10	QT
4	O, F	9150-01-092-3205	OIL, ENGINE, MIL-L-2104, OE/HDO-30	QT
5	O, F	9150-01-433-7970	OIL, ENGINE, MIL-L-2104, OE/HDO-40	QT
6	O, F	6850-01-160-3868	OIL, INHIBITOR, CORROSION	QT
7	O, F	6850-00-264-9038	SOLVENT, CLEANING, DRY (81349) P/N PD-680, TPE II OR III	CN
8	O, F	7920-01-338-3329	CLOTH, CLEANING	BG
9	O, F	9150-00-663-1770	GREASE, GENERAL PURPOSE, 630AA	OZ
10	O, F	8010-01-229-7547	PAINT, CARC, MIL-C-46168, COLOR GREEN 383, NO. 34094	GL
11	O, F	8010-01-340-5175	PAINT, CARC, MIL-C-46168, COLOR BLACK, NO. 37038	GL

(1) Item Number	(2) Level	(3) National Stock Number	(4) Item Name, Description CAGEC, Part Number	(5) U/M
12	O, F	3439-00-974-1873	SOLDER, TIN ALLOY	SL
13	O, F		TUBING, HEAT SHRINK	IN
14	O, F	8040-00-843-0802	SEALANT, RTV 108	OZ
15	O, F		SEALANT, THREAD, PERMATEX 70-1536	OZ
16	F	8030-01-025-1692	SEALING COMPOUND, ADHESIVE, LOCTITE 242	OZ
17	O, F	9150-00-111-201	OIL, LUBRICATING, ENGINE, PE 30, MIL-L-21260	QT
18	O, F	7510-00-836-0810	TAPE, PRESSURE SENSITIVE ADHESIVE, PPT-T-60	RL
19	O, F	8030-00-889-355	TAPE, ANTISEIZING, TEFLON	EA
20	F	6810-00-107-1510	WATER, DISTILLED	DR

This page
Intentionally
Left blank

APPENDIX F

ILLUSTRATED LIST OF MANUFACTURED ITEMS

NOT APPLCABLE

This page
Intentionally
Left blank

APPENDIX G

TORQUE LIMITS

Section I. INTRODUCTION

G-1. Scope.

This appendix lists torque ratings for fasteners used on the generator set. When torque values are called out in the maintenance procedures, those torques supersede the torques specified in this appendix. Table G-1 lists torque limits for standard fasteners installed dry. Table G-2 provides formulas for converting the dry torque values to wet. Table G-3 lists torque limits for standard metric fasteners installed dry.

Section II. TORQUE LIMITS

Table G-1. Torque Limits for Dry Fasteners

			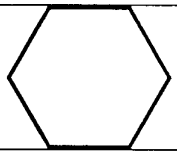		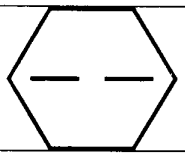		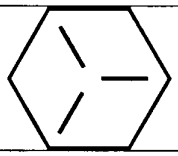	
SIZE			TORQUE					
			SAE GRADE 0-1-2		SAE GRADE 3		SAE GRADE 5	
Diameter in Inches	Threads Per Inch	Millimeters	Foot Pounds	Newton Meters	Foot Pounds	Newton Meters	Foot Pounds	Newton Meters
1/4	20	6.350	6	8	9	12	10	14
1/4	28	6.350	7	9	10	13	11	15
5/16	18	7.937	12	16	17	23	19	26
5/16	24	7.937	13	18	18	25	21	28
3/8	16	9.525	20	27	30	40	33	45
3/8	24	9.525	22	30	33	44	36	49
7/16	14	11.112	32	43	47	64	54	73
7/16	20	11.112	35	47	51	69	59	80
1/2	13	12.700	47	64	69	93	78	106
1/2	20	12.700	51	69	75	102	85	115
9/16	12	14.287	69	94	103	140	114	155
9/16	18	14.287	75	102	112	152	124	168
5/8	11	15.875	96	130	145	197	154	209
5/8	28	15.875	105	142	158	214	168	228
3/4	10	19.050	155	210	234	317	257	348
3/4	26	19.050	169	229	255	346	280	380
7/8	9	22.225	206	279	372	504	382	518
7/8	24	22.225	225	304	405	550	416	565
1	8	25.400	310	420	551	747	587	796
1	14	25.400	338	458	601	814	640	867

Table G-1. Torque Limits for Dry Fasteners - cont.

SIZE			TORQUE					
			SAE GRADE 6		SAE GRADE 7		SAE GRADE 8	
Diameter in Inches	Threads Per Inch	Millimeters	Foot Pounds	Newton Meters	Foot Pounds	Newton Meters	Foot Pounds	Newton Meters
1/4	20	6.350	13	17	13	18	14	19
1/4	28	6.350	14	18	14	19	15	21
5/16	18	7.937	24	33	25	34	29	39
5/16	24	7.937	26	35	27	37	32	43
3/8	16	9.525	43	58	44	60	47	64
3/8	24	9.525	47	64	48	65	51	69
7/16	14	11.112	69	94	71	96	78	106
7/16	20	11.112	75	102	77	105	85	115
1/2	13	12.700	106	144	110	149	119	161
1/2	20	12.700	116	157	120	163	130	176
9/16	12	14.287	150	203	154	209	169	229
9/16	18	14.287	164	222	168	228	184	250
5/8	11	15.875	209	283	215	291	230	312
5/8	28	15.875	228	309	234	318	251	340
3/4	10	19.050	350	475	360	488	380	515
3/4	26	19.050	382	517	392	532	414	562
7/8	9	22.225	550	746	570	773	600	813
7/8	24	22.225	600	813	621	842	654	887
1	8	25.400	825	1119	840	1139	900	1220
1	14	25.400	899	1219	916	1241	981	1330

Table G-2. Effect of Lubrication on Torque

	TORQUE RATING IN FOOT-POUNDS	
Lubricant	5/16-18 Thread/Inch	1/2-13 Thread/Inch
NO LUBE, Steel	29	121
Plated and cleaned	19 (66%)	90 (26%)
SAE 20 Oil	18 (38%)	87 (28%)
SAE 40 Oil	17 (41%)	83 (31%)
Plated and SAE 30	16 (45%)	79 (35%)
White Grease	16 (45%)	79 (35%)
White Moly Film	14 (52%)	66 (45%)
Graphite and Oil	13 (55%)	62 (49%)

Table G-3. Torque Limits for Dry Fasteners (Metric)

			5D		8G		10K		12K	
			Standard 5D		Standard 8G		Standard 10K		Standard 12K	
Diameter in Millimeters	Coarse Thread Pitch	Inches	Ft-lb	Nm	Ft-lb	Nm	Ft-lb	Nm	Ft-lb	Nm
6	1.00	0.2362	5	7	6	8	8	11	10	14
8	1.00	0.3150	10	14	16	22	22	30	27	37
10	1.25	0.3937	19	26	31	42	40	54	49	66
12	1.25	0.4624	34	46	54	73	70	95	86	117
14	1.25	0.5512	55	75	89	121	117	159	137	186
16	2.00	0.6299	83	113	132	179	175	237	208	282
18	2.00	0.7087	111	150	182	247	236	320	283	384
22	2.50	0.8771	182	247	284	385	394	534	464	629
24	3.00	0.9449	261	354	419	568	570	773	689	934

This page
Intentionally
Left blank

APPENDIX H

MANDATORY REPLACEMENT PARTS

Section I. INTRODUCTION

H-1. Scope.

This appendix lists all mandatory replacement parts referenced in the maintenance procedures in this manual. These are items that must be replaced during maintenance whether they have failed or not. This includes items based on usage intervals such as time, operating hours, etc.

Section II. MANDATORY REPLACEMENT PARTS

(1) Item No.	(2) Part Number	(3) National Stock Number	(4) Nomenclature	(5) Qty
1	MS3367-5-9	5975-00-111-3208	STRAP,TIEDOWN,ELECTRIC	V
2	H1104	5975-00-727-5153	STRAP,TIEDOWN,ELECTRIC	V
3	MS51844-23	4030-01-114-3894	SWAGING SLEEVE,WIRE	2
4	PLT 2S	5975-01-128-0390	STRAP,TIEDOWN,ELECTRIC	V

This page
Intentionally
Left blank

APPENDIX I

WARRANTY INFORMATION

Section I. INTRODUCTION

I-1. Scope.

a. This appendix provides information on manufacturer's warranties for generator set components. The warranty period begins on the date of end item shipment to the government, as defined by the warranty date on the end item data plate, unless otherwise noted in Table I-1.

b. Warranty service may be obtained with two methods. 1) Warranty service can be obtained by contacting the actual warranted component manufacturer listed in column 1. Each manufacturer will provide instructions on filing a claim. 2) Fill out a warranty claim per DA PAM 738-750. The preferred warranty claim form is the SF368, Product Quality Deficiency Report. The DA Form 2407, Maintenance Request, is also acceptable.

c. Troubleshooting should be performed to the level of warranted component, but no further. Troubleshooting to the failed part inside warranted components may invalidate the warranty.

d. If you have difficulty with or questions about the warranty process, contact your local CECOM LAR or the CECOM Generator Branch, DSN 992-1313, (732) 532-1313.

Section II. WARRANTY INFORMATION

Table I-1. Manufacturer's Warranties

(1) Manufacturer	(2) Component Under Warranty	(3) Warranty Period
Fermont 141 North Ave Bridgeport, CT 06606 Phone: 203-366-5211 Fax: 203-367-3642 CAGE: 93742	Alternator Assembly, 3KW Permanent Magnet (PN: 98-19634, VPN: 692497)	1 Year or 1800 Hours

(1) Manufacturer	(2) Component Under Warranty	(3) Warranty Period
Technology Research Corporation PO Box 17649 Clearwater, FL 34622 Phone: 727-535-0572 Fax: 727-535-4828 CAGE: 60177	Power Inverter/Converter, 60 Hz (PN: 98-19604-01, VPN: 29350) Power Inverter/Converter, 400 Hz (PN: 98-19604-02, VPN: 29340) Regulator, Battery Charger (PN: 98-19626, VPN: 29380) Module, Fault Indicator (PN: 98-19527, VPN: 29390) Interrupter, Ground Fault (PN: 19541, VPN: 29410)	1 Year
Yanmar Diesel America Corp Mack Boring and Parts Company 2365 Route 22 West Union, NJ 07083 Phone: 908-964-0700 Fax: 908-964-8475 E-mail: sales@mackboring.com CAGE: S4163	Engine, Diesel (PN:: 98-19513, VPN: L70AE-DEGFR)	1 Year
Comair Rotron Inc. 2675 Custom House Ct San Ysidro, CA 92173 Phone: 619-661-6688 Fax: 619-661-6051 CAGE: 5Y921	Fan, 115VAC, 60 Hz (PN: 98-19512-01, VPN: 031842) Fan, 24VDC (PN: 98-19512-02, VPN: 031843)	1 Year
Governors of America Corporation 720 Silver Street Agawam, MA 01001 Phone: 413-786-5600 Fax: 413-786-5666 CAGE: 0BXW5	Actuator, Governor, 24VDC (PN: 98-19580, VPN: ACD150) Controller, Governor, 24VDC (P/N 98-19539, VPN: SLC100)	1 Year

(1) Manufacturer	(2) Component Under Warranty	(3) Warranty Period
Nelson Industries Inc. Universal Silencer Div 1801 Hwy 51/138 West Stoughton, WI 53589 Phone: 608-873-2422 Fax: 608-873-2409 CAGE: 0TW02	Muffler Assembly, Exhaust (PN: 98-19607, VPN: 270583N)	1 Year
IMO Industries Inc. Gems Sensors Div 1 Cowles Road Plainville, CT 06062 Phone: 860-747-3000 Fax: 860-793-4563 CAGE: 04034	Switch, Fuel Level (PN: 98-19519, VPN: 171595)	1 Year
Purolator Products Co. Motor Components Division 3 Miracle Mile, PO Box 1502 Elmira, NY 14902 Phone: 607-737-8284 Fax: 607-737-8335 CAGE: 72850	Pump, Fuel Auxiliary (PN: 88-21738, VPN: 40194)	1 Year from Date of Shipment from Purolator
Prestolite Electric Inc. Hwy 20 W, PO Box 2205 Decatur, AL 35602 Phone: 734-913-6614 Fax: 734-913-6654 CAGE: 7E656	Contactor, 2-Pole, 100 Amp (PN: 98-19523, VPN: E033845)	1 Year

This page
Intentionally
Left blank

ALPHABETICAL INDEX

A

AC Circuit Interrupter Contactor Maintenance....4-56
Access Cover Maintenance....4-100
Actuator Maintenance, Governor....4-134
Additional Authorization List (AAL) Items....D-1
Administrative Storage....1-4
Air Filter Maintenance....3-11
Alternating Current System....1-23
Alternator Maintenance, Permanent Magnet....5-10
Assembly and Preparation for Use....2-19
Auxiliary Equipment....2-26
Auxiliary Fuel Pump Maintenance....4-126

B

Battery Cable Assembly Maintenance....4-96
Battery Charging Regulator Maintenance....4-58
Battery Maintenance....4-92
Battle Short Operation....2-28
BREAKER Maintenance, DC CIRCUIT....4-43

C

Charging Regulator Maintenance, Battery....4-58
CIRCUIT BREAKER Maintenance....4-43
Circuit Interrupter Contactor Maintenance....4-56
CIRCUIT INTERRUPTER Indicator Light Maintenance....4-44
Circuit Interrupter Maintenance, Ground Fault....4-62
Cleaning Agents....2-10
Cleaning Agents....4-8
Common Tools and Equipment....4-6
Components Of End Item (COEI) And Basic Issue Items (BII) Lists....C-1
Consolidated Index of Army Publications and Blank Forms....1-2
Contactor Maintenance, AC Circuit Interrupter....4-56
Contactor Maintenance, DC Magnetic....4-132
Control Box and Output Panel Assemblies Maintenance....3-9
Control Box Assembly Maintenance....4-28
Control Box Fuse, Diode, and Terminal Block Maintenance....4-50
Control Box Relay Maintenance....4-48
Control Box Wiring Harness Maintenance....4-54
Control Maintenance, Governor....4-52

C – continued

Control Panel Assembly Maintenance 4-32
Controls and Indicators 2-2
Convenience Receptacle Maintenance 4-60
Converter Maintenance, Power Inverter 4-128
Cooling Fan and Temperature Switch Maintenance 4-112
Corrosion Prevention and Control (CPC) 1-2
Cover Maintenance 3-9
Cover Maintenance, Main Access 4-100
Cross-Reference List 1-4

D

Daily Checks 2-23
DC CIRCUIT BREAKER Maintenance 4-43
DC Magnetic Contactor Maintenance 4-132
Decontamination Procedures, (NBC) 2-29
Destruction of Army Material to Prevent Enemy Use 1-4
Differences Between Models 1-10
Diode and Terminal Block Maintenance 4-50
Direct Current System 1-21
Direct Support Troubleshooting 5-3
Drain Assembly Maintenance 4-74

E

Electrical System 1-21
Emergency Shut Down 2-26
EMERGENCY STOP Switch Maintenance 4-41
EMI Filter Maintenance 4-66
Enclosure and Cover Maintenance 3-9
Enclosure Panel Maintenance 4-108
End Item (COEI) And Basic Issue Items (BII) Lists, Components Of C-1
Engine / Alternator Assembly Maintenance 5-4
Engine Oil Drain Assembly Maintenance 4-74
Engine Temperature Switch Maintenance 4-76
Equipment Characteristics, Capabilities, and Features 1-5
Equipment Data 1-10
Equipment Improvement Recommendations (EIR's) 1-4
Expendable And Durable Items List E-1
Fan and Temperature Switch Maintenance 4-112

F

Fault Indicator Module Maintenance 4-38
Fill Cap and Fill Pocket Maintenance 4-123
Fill Pocket Maintenance 4-123

F – continued

Filter / Water Separator Maintenance, Fuel 4-120
Filter Maintenance, Air 3-11
Filter Maintenance, EMI 4-66
Forms and Records 1-2
Fuel Fill Cap and Fill Pocket Maintenance 4-123
Fuel Filter / Water Separator Maintenance 3-10
Fuel Filter / Water Separator Maintenance 4-120
FUEL LEVEL Gauge Maintenance 4-35
Fuel Level Switch Assembly Maintenance 4-80
Fuel Pickup Tube Assembly Maintenance 4-84
Fuel Pump Maintenance, Auxiliary 4-126
Fuel Pump Maintenance, Primary 4-85
Fuel Sender Maintenance 4-82
Fuel System Maintenance 3-10
Fuel System 1-24
Fuel Tank Maintenance 5-14
Fuse, Diode, and Terminal Block Maintenance 4-50

G

Gauge Maintenance, FUEL LEVEL 4-35
Generator Set Enclosure and Cover Maintenance 3-9
Generator Set Maintenance 4-27
Generator Set Shut Down 2-26
Generator 1-23
Governor Actuator Maintenance 4-135
Governor Control Maintenance 4-52
Ground Fault Circuit Interrupter Maintenance 4-62

H, I, J, K

Hand Starting (Manual Engine Cranking) 2-30
HOURS Meter Maintenance 4-34
Identification and Instruction Plates 1-10
Illustrated List Of Manufactured Items F-1
Index of Army Publications and Blank Forms 1-2
Indicator Light Maintenance, CIRCUIT INTERRUPTER 4-44
Initial Adjustments, Daily Checks, and Self Test 2-23
Instruction Plates 1-10
Intermediate Term Storage (more than 30 days) 4-140
Inverter / Converter Maintenance 4-128

L

Leakage Definitions for Operator PMCS 2-11
Level Switch Assembly Maintenance, Fuel 4-80
Lifting Handle Maintenance 4-72
List of Abbreviations 1-4
LOAD Meter Maintenance 4-37
Location and Description of Major Components 1-6
Lubrication Instructions 3-2
Lubrication Oil Pressure Switch Maintenance 4-78

M, N

Magnetic Contactor Maintenance 4-132
Main Access Cover Maintenance 4-100
Maintenance Allocation Chart (MAC) B-1
Maintenance Forms and Records 1-2
Major Components, Location and Description of 1-6
Mandatory Replacement Parts H-1
Manufactured Items F-1
Meter Maintenance, HOURS 4-34
Meter Maintenance, LOAD 4-37
Meter Maintenance, VOLTAGE 4-36
Module Maintenance, Fault Indicator 4-38
Muffler Assembly Maintenance 4-88
Nomenclature Cross-Reference List 1-4
Nuclear, Biological, and Chemical (NBC) Decontamination Procedures 2-29

O

Oil Drain Assembly Maintenance 4-74
Oil Pressure Switch Maintenance 4-78
Operating Instructions on Decals and Instruction Plates 2-26
Operating Procedures 2-24
Operation in Unusual Weather 2-28
Operation of Auxiliary Equipment 2-26
Operation, Principles of 1-21
Operator PMCS Procedures 2-8
Operator Switch Maintenance 4-39
Operator Troubleshooting 3-3
Operators Controls and Indicators 2-2
Output Panel Assemblies Maintenance 3-9
Output Terminals and EMI Filter Maintenance 4-66

P, Q

Permanent Magnet Alternator Maintenance 5-10
Pickup Tube Assembly Maintenance 4-84
Plates, Identification and Instruction 1-10
PMCS Procedures, Operator 2-8
PMCS Procedures, Unit 4-7
Power Inverter / Converter Maintenance 4-128
Preparation for Use 2-19
Pressure Switch Maintenance, Lubrication Oil 4-78
Primary Fuel Pump Maintenance 4-85
Principles of Operation 1-21
Pump Maintenance, Auxiliary Fuel 4-126
Pump Maintenance, Primary Fuel 4-85

R

Receptacle Maintenance, Convenience 4-60
RECEPTACLE Maintenance, SLAVE 4-64
References A-1
Regulator Maintenance, Battery Charging 4-58
Relay Maintenance, Control Box 4-48
Repair Parts 4-6
Replacement Parts, Mandatory H-1
Reporting Equipment Improvement Recommendations (EIR's) 1-4
Resistor Maintenance, Voltage 4-70
Rheostat Maintenance, VOLTAGE ADJUST 4-46

S

Scope 1-2
Self Test 2-23
Shipment 4-140
Short Term Storage (30 days or less) 4-140
Shut Down 2-26
Shut Down, Emergency 2-26
SLAVE RECEPTACLE Maintenance 4-64
Special Tools, TMDE, and Support Equipment 4-6
Starting (Manual Engine Cranking) 2-30
Storage, Administrative 4-140
Storage, Intermediate Term (more than 30 days) 4-140
Storage, Short Term (30 days or less) 4-140
Support Equipment, Special 4-6
Switch Assembly Maintenance, Fuel Level 4-80
Switch Maintenance, EMERGENCY STOP 4-41
Switch Maintenance, Engine Temperature 4-76
Switch Maintenance, Lubrication Oil Pressure 4-78
Switch Maintenance, Operator 4-39
Switch Maintenance, Temperature 4-112

T

Tank Maintenance, Fuel 5-14
Temperature Switch Maintenance 4-112
Temperature Switch Maintenance 4-76
Terminal Block Maintenance 4-50
TMDE 4-6
Tools and Equipment, Common 4-6
Torque Limits G-1
Troubleshooting, Direct Support 5-3
Troubleshooting, Operator 3-3
Troubleshooting, Unit 4-12
Tube Assembly Maintenance, Fuel Pickup 4-84

U, V

Unit PMCS Procedures 4-7
Unit Troubleshooting 4-12
Unusual Weather, Operation in 2-28
VOLTAGE ADJUST Rheostat Maintenance 4-46
VOLTAGE Meter Maintenance 4-36
Voltage Resistor Maintenance 4-70

W, X, Y, Z

Warranty Information 1-4
Warranty Information I-1
Water Separator Maintenance 3-10
Water Separator Maintenance 4-120
Wiring Harness Maintenance, Control Box 4-54

RECOMMENDED CHANGES TO EQUIPMENT TECHNICAL PUBLICATIONS

SOMETHING WRONG WITH THIS PUBLICATION

THEN ... JOT DOWN THE INFO ABOUT IT ON THIS FORM. CAREFULLY TEAR IT OUT. FOLD IT AND DROP IT IN THE MAIL.

FROM: (PRINT YOUR UNIT'S COMPLETE
Commander
Stateside Army Depot
ATTN: AMSTA-US
Stateside, N.J. 07703-5007

DATE SENT
10 July 1975

PUBLICATION	PUBLICATION DATE	PUBLICATION
TM 11-5840-340-12	23 Jan 74	Radar Set AN/PRC-

BE EXACT PIN-POINT WHERE IT

PAGE NO	PARA GRAPH	FIGURE NO	TABLE NO	IN THIS SPACE TELL WHAT IS WRONG AND WHAT SHOULD BE DONE ABOUT IT:
2-25	2-28			Recommend that the installation antenna alignment procedure be changed throughout to specify a 20 IFF antenna lag rather than 10. REASON: Experience has shown that with only a 10 lag, the antenna servo system is too sensitive to wind gusting excess of 25 knots, and has a tendency to rapidly accelerate and decelerate as it hunts, causing strain to the drive train. Hunting is minimized by adjusting the lag to 20 degradation of operation.
3-10	3-3		3-1	Item 5, Functional column. Change “2 dB" to “3 dB”. REASON: The adjustment procedure for the TRANS POWER FAULT indicator calls for a 3 dB (500 watts) adjustment to light the TRANS POWER FAULT indicator.
5-6	5-8			Add new step f.1 to read, “Replace cover plate removed in step e.1, above." REASON: To replace the cover plate.
		FO-3		Zone C 3. On J1-2, change “+24 VDC" to “+5 VDC". REASON: This is the output line of the 5 VDC power supply. +24 VDC is the input voltage.

SAMPLE

PRINTED NAME, GRADE OR TITLE AND TELEPHONE

SSG I. M. DeSpiritof 999-1776

SIGN HERE

DA FORM 1 JUL 79 2028-2

PREVIOUS ARE OBSOLETE

P.S. - IF YOUR OUTFIT WANTS TO KNOW ABOUT RECOMMENDATION MAKE A CARBON COPY OF AND GIVE IT TO YOUR

REVERSE OF DA FORM 2028-2

FILL IN YOUR
UNIT'S ADDRESS

FOLD BACK

DEPARTMENT OF THE ARMY

OFFICIAL BUSINESS

PLEASE
AFFIX
STAMP
POSTAGE
REQUIRED

Commander
U.S. Army Communications-Electronics Command
and Fort Monmouth
ATTN: AMSEL-LC-LEO-D-CS-CFO
Fort Monmouth, New Jersey 07703-5000

SAMPLE

TEAR ALONG DOTTED LINE

TEAR ALONG DOTTED LINE

RECOMMENDED CHANGES TO EQUIPMENT TECHNICAL PUBLICATIONS

THEN ... JOT DOWN THE INFO ABOUT IT ON THIS FORM. CAREFULLY TEAR IT OUT. FOLD IT AND DROP IT IN THE MAIL.

SOMETHING WRONG WITH THIS PUBLICATION

FROM: (PRINT YOUR UNIT'S COMPLETE ADDRESS)

DATE SENT

PUBLICATION NUMBER	PUBLICATION DATE	PUBLICATION TITLE

BE EXACT PIN-POINT WHERE IT IS				IN THIS SPACE TELL WHAT IS WRONG AND WHAT SHOULD BE DONE ABOUT IT:
PAGE NO	PARA-GRAPH	FIGURE NO	TABLE NO	

PRINTED NAME, GRADE OR TITLE AND TELEPHONE NUMBER	SIGN HERE

DA FORM 1 JUL 79 **2028-2**

PREVIOUS EDITIONS ARE OBSOLETE

P.S. – IF YOUR OUTFIT WANTS TO KNOW ABOUT YOUR RECOMMENDATION MAKE A CARBON COPY OF THIS AND GIVE IT TO YOUR HEADQUARTERS.

REVERSE OF DA FORM 2028-2

FILL IN YOUR
UNIT'S ADDRESS

FOLD BACK

DEPARTMENT OF THE ARMY

OFFICIAL BUSINESS

PLEASE
AFFIX
STAMP
POSTAGE
REQUIRED

Commander
U.S. Army Communications-Electronics Command
and Fort Monmouth
ATTN: AMSEL-LC-LEO-D-CS-CFO
Fort Monmouth, New Jersey 07703-5000

TEAR ALONG DOTTED LINE

TEAR ALONG DOTTED LINE

RECOMMENDED CHANGES TO EQUIPMENT TECHNICAL PUBLICATIONS

THEN ... JOT DOWN THE INFO ABOUT IT ON THIS FORM. CAREFULLY TEAR IT OUT. FOLD IT AND DROP IT IN THE MAIL.

SOMETHING WRONG WITH THIS PUBLICATION

FROM: (PRINT YOUR UNIT'S COMPLETE ADDRESS)

DATE SENT

PUBLICATION NUMBER	PUBLICATION DATE	PUBLICATION TITLE

BE EXACT PIN-POINT WHERE IT IS				IN THIS SPACE TELL WHAT IS WRONG AND WHAT SHOULD BE DONE ABOUT IT:
PAGE NO	PARA-GRAPH	FIGURE NO	TABLE NO	

PRINTED NAME, GRADE OR TITLE AND TELEPHONE NUMBER	SIGN HERE

DA FORM 1 JUL 79 **2028-2**

PREVIOUS EDITIONS ARE OBSOLETE

P.S. – IF YOUR OUTFIT WANTS TO KNOW ABOUT YOUR RECOMMENDATION MAKE A CARBON COPY OF THIS AND GIVE IT TO YOUR HEADQUARTERS.

REVERSE OF DA FORM 2028-2

FILL IN YOUR
UNIT'S ADDRESS

FOLD BACK

DEPARTMENT OF THE ARMY

OFFICIAL BUSINESS

PLEASE
AFFIX
STAMP
POSTAGE
REQUIRED

Commander
U.S. Army Communications-Electronics Command
and Fort Monmouth
ATTN: AMSEL-LC-LEO-D-CS-CFO
Fort Monmouth, New Jersey 07703-5000

TEAR ALONG DOTTED LINE

TEAR ALONG DOTTED LINE

RECOMMENDED CHANGES TO EQUIPMENT TECHNICAL PUBLICATIONS

THEN ... JOT DOWN THE INFO ABOUT IT ON THIS FORM. CAREFULLY TEAR IT OUT. FOLD IT AND DROP IT IN THE MAIL.

SOMETHING WRONG WITH THIS PUBLICATION

FROM: (PRINT YOUR UNIT'S COMPLETE ADDRESS)

DATE SENT

PUBLICATION NUMBER	PUBLICATION DATE	PUBLICATION TITLE

BE EXACT PIN-POINT WHERE IT IS				IN THIS SPACE TELL WHAT IS WRONG AND WHAT SHOULD BE DONE ABOUT IT:
PAGE NO	PARA-GRAPH	FIGURE NO	TABLE NO	

PRINTED NAME, GRADE OR TITLE AND TELEPHONE NUMBER	SIGN HERE

DA FORM 1 JUL 79 **2028-2**

PREVIOUS EDITIONS ARE OBSOLETE

P.S. – IF YOUR OUTFIT WANTS TO KNOW ABOUT YOUR RECOMMENDATION MAKE A CARBON COPY OF THIS AND GIVE IT TO YOUR HEADQUARTERS.

REVERSE OF DA FORM 2028-2

FILL IN YOUR
UNIT'S ADDRESS

FOLD BACK

DEPARTMENT OF THE ARMY

OFFICIAL BUSINESS

PLEASE
AFFIX
STAMP
POSTAGE
REQUIRED

Commander
U.S. Army Communications-Electronics Command
and Fort Monmouth
ATTN: AMSEL-LC-LEO-D-CS-CFO
Fort Monmouth, New Jersey 07703-5000

TEAR ALONG DOTTED LINE

By Order of the Secretary of the Army:

ERIC K. SHINSEKI
General, United States Army
Chief of Staff

Official:

JOEL B. HUDSON
Administrative Assistant to the
Secretary of the Army
0024102

By Order of the Secretary of the Marine Corps:

RANDALL P. SHOCKEY
Director, Program Support
Marine Corps Systems Command

By Order of the Secretary of the Air Force:

MICHAEL E. RYAN
General, United States Air Force
Chief of Staff

Official:

GEORGE T. BABBITT
General, United States Air Force
Commander, AFMC

DISTRIBUTION:

To be distributed in accordance with the initial distribution number (IDN) 256631 requirements for TM 9-6115-639-13.

DESIGNATION	DESCRIPTION
A2	MALFUNCTION GROUP
A5	GOVERNOR CONTROL
A6	GOVERNOR ACTUATOR
A8	POWER CONVERTER
A9	REGULATOR, BATTERY CHARGING
B1	STARTER, ENGINE
BT1	BATTERY, 24V
B2, B3	FAN, VENTILATING
CB1	CIRCUIT BREAKER, DC CONTROL
CB3	GROUND FAULT CIRCUIT INTERRUPTER
CR1,CR2,CR3	DIODE, BLOCKING (BATT REV POLARITY)
CR4	RECTIFIER, FULL WAVE
DS6	INDICATOR, AC CIRCUIT INT CLOSED
E1	PUMP, AUX FUEL TRANSFER
E2	PUMP, ENGINE FUEL TRANSFER
EMI	FILTER, EMI
FU1	FUSE, BATTERY CHARGING REGULATOR
FL1	SWITCH, FLOAT, LOW FUEL SHUTDOWN
FL2A	SWITCH, FLOAT, AUX FUEL PUMP OFF
FL2B	SWITCH, FLOAT, AUX FUEL PUMP ON
G1	GENERATOR, 3KW
GND	GROUND STUD
H1, H2	HEATER, AIR
HT	SWITCH, ENGINE HIGH TEMP.
J1	CONVENIENCE RECEPTACLE (DUPLEX)
K1	A.C. CIRCUIT INTERRUPTER
K2	CONTACTOR, ENGINE START
K3	OVERVOLTAGE RELAY (P/O A8)
K6	SHORT CIRCUIT RELAY (P/O A8)
K8	OVERLOAD SHORT CIRCUIT RELAY (P/O A8)
K12	RELAY, FAULT LOCKOUT
K13	CONTACTOR, ENGINE PRE-HEAT
K14	RELAY, AUX FUEL TRANSFER
K15	RELAY, STARTER CUTOUT
L1, L2, N	LOAD TERMINAL
L4	SOLENOID, ENGINE STARTER (PART OF B1)
M1	VOLTMETER, AC (0-250V)
M2	KILOWATT METER
M3	METER, TOTAL TIME (TT)
M5	METER, FUEL LEVEL
MT5	FUEL LEVEL SENDER
OP	SWITCH, LOW OIL PRESSURE
R1	RHEOSTAT, VOLTAGE ADJUST
R6	RESISTOR, STARTER CUTOUT RELAY
RV1, RV2, RV3	SURGE ARRESTOR
S1	SWITCH, MASTER (STOP-RUN-START)
S5	SWITCH, A.C. CIRCUIT INTERRUPTER
S7	SWITCH, BATTLE SHORT
S17	SWITCH, AUX FUEL
S18	SWITCH, ENGINE PRE-HEAT SYSTEM
S19	SWITCH, EMERGENCY STOP
S20, S21	SWITCH, TEMPERATURE
SR1	SLAVE RECEPTACLE (NATO)
TB2	TERMINAL BOARD, OUTPUT LOAD
TB3	TERMINAL BOARD, DIAGNOSTIC TEST POINTS
TB4, TB5, TB6	TERMINAL BOARD
TVS1-TVS6	TRANSIENT VOLTAGE SUPPRESSOR

CONNECTOR	DESCRIPTION
J4/P4	A2 (MALFUNCTION GROUP)
J5/P5	HT (SWITCH, ENG HIGH TEMP)
J6/P6	A9 (REG, BATTERY CHARGING)
J7/P7	CONTROL BOX CONNECTOR
J8/P8	FL2A/FL2B (FLOAT SWITCH)
J9/P9	E1 (PUMP)
J10/P10	A6 (GOVERNOR ACTUATOR)
J11/P11	FL1 (FLOAT SWITCH)
J12/P12	E2 (PUMP)
J13/P13	B2 (FAN)
J14/P14	B3 (FAN)
J15/P15, J16/P16, J17/P17	A8 (POWER CONVERTER)

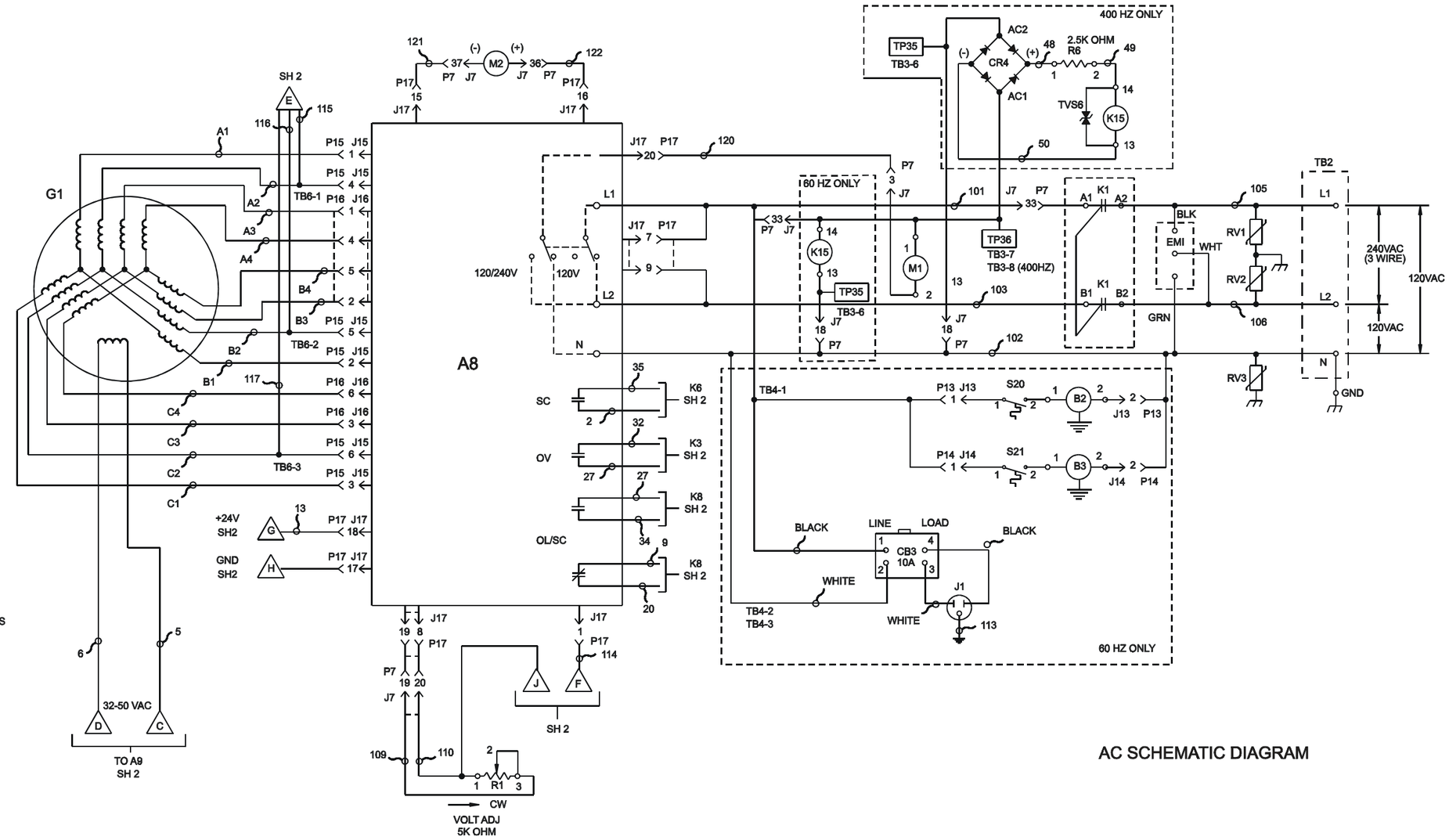

AC SCHEMATIC DIAGRAM

Figure FO-1. Generator Set Electrical Schematic (Sheet 1 of 2)

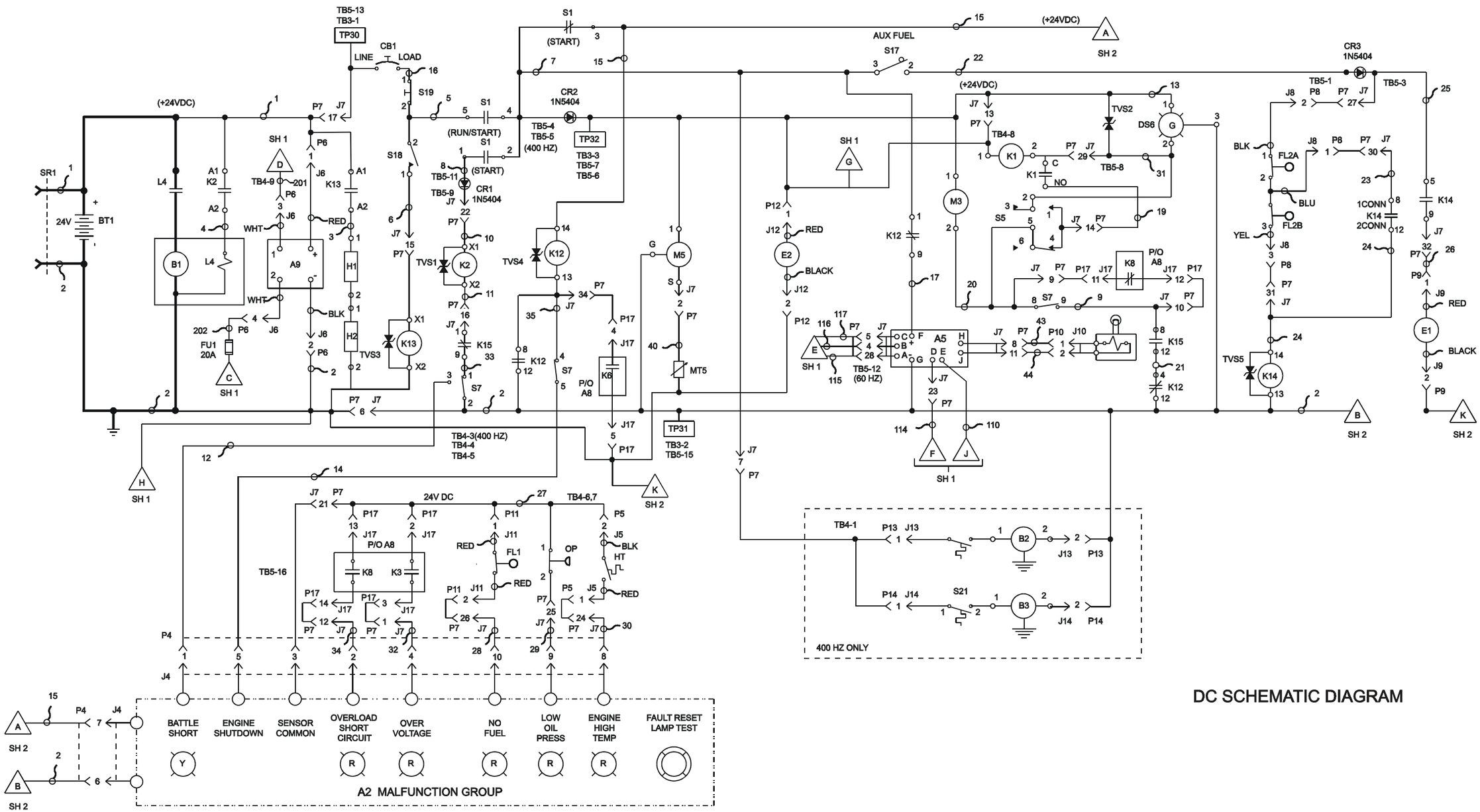

Figure FO-1. Generator Set Electrical Schematic (Sheet 2 of 2)

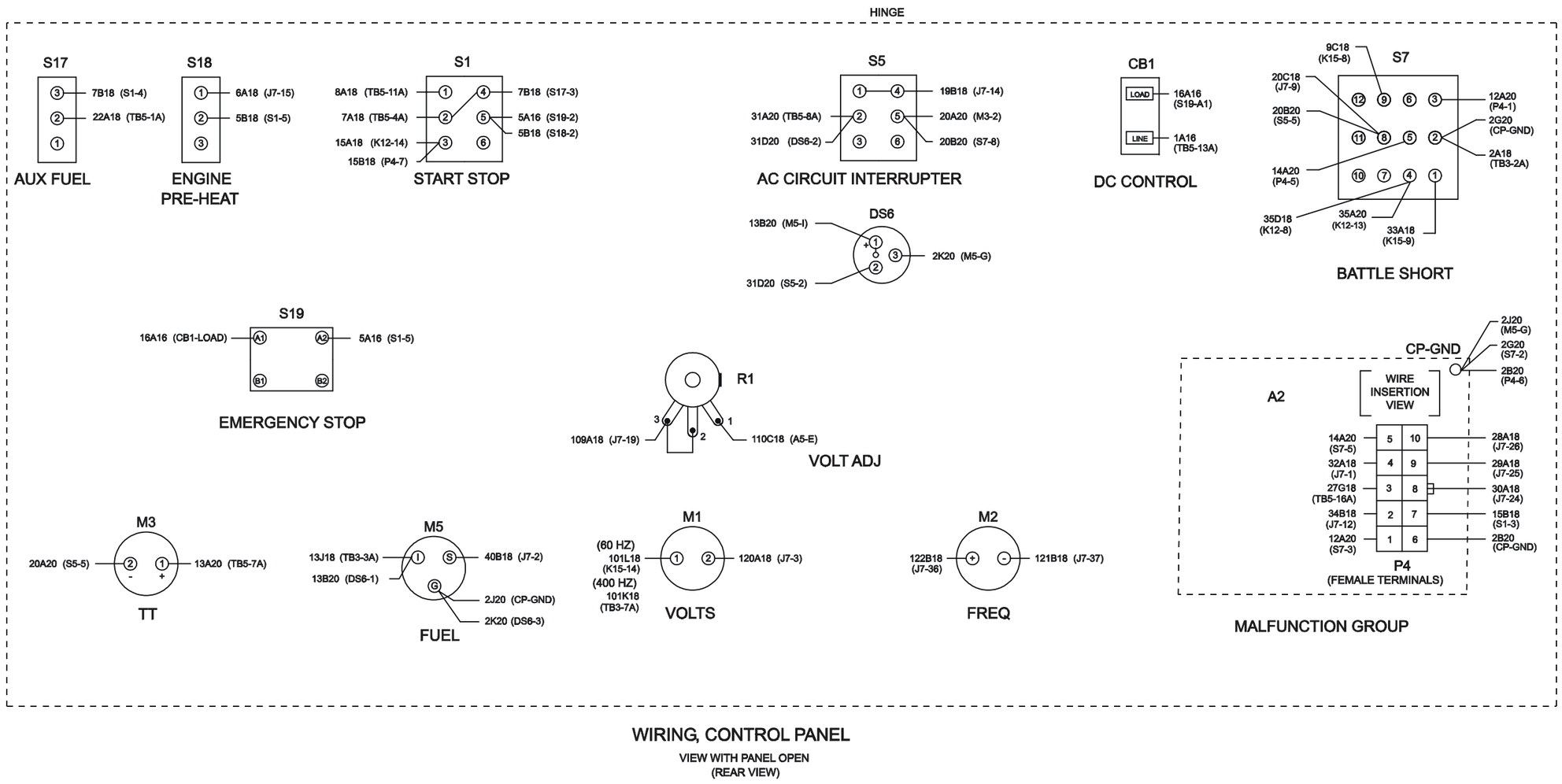

Figure FO-2. Generator Set Wiring Diagram (Sheet 1 of 4)

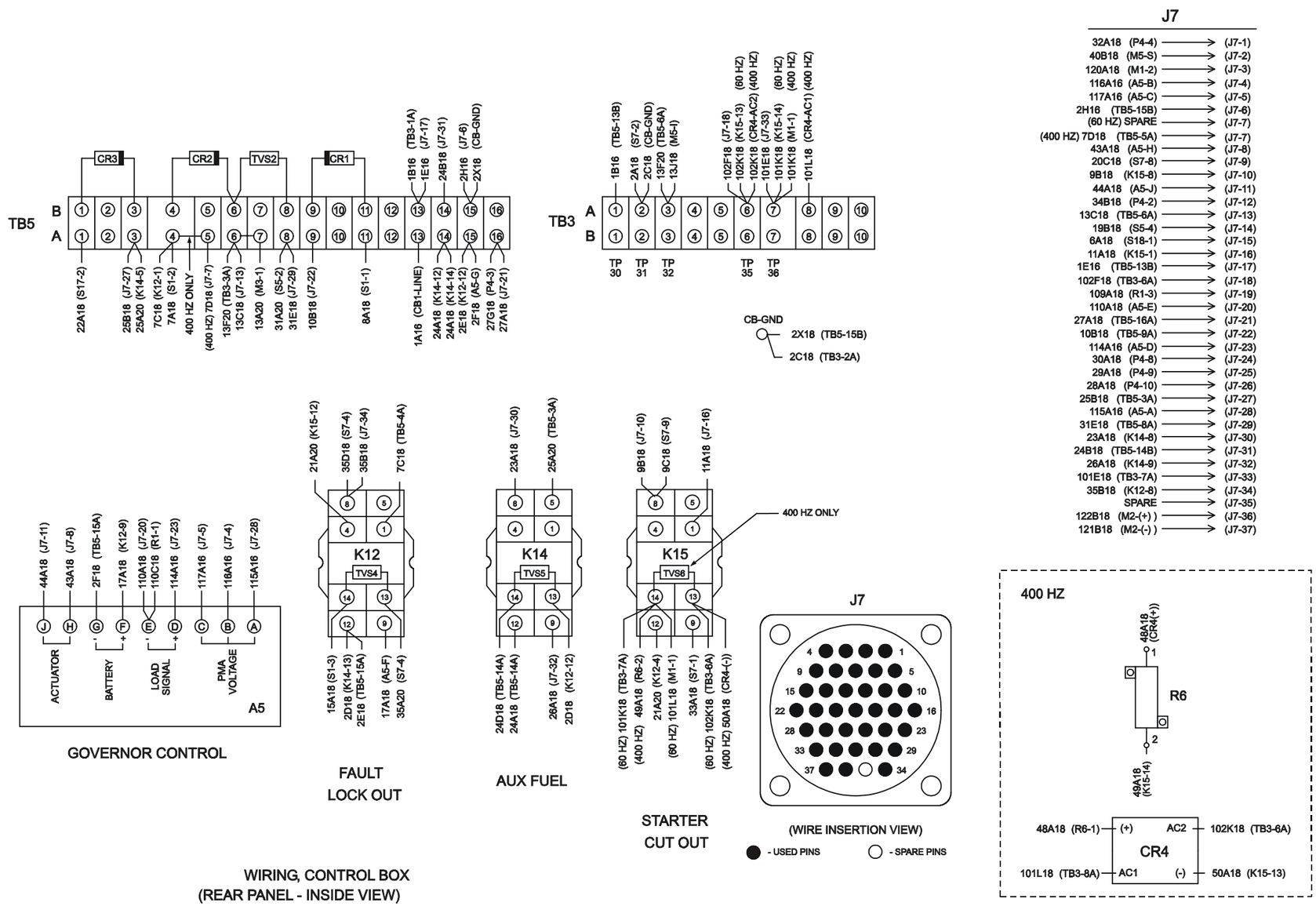

Figure FO-2. Generator Set Wiring Diagram (Sheet 2 of 4)

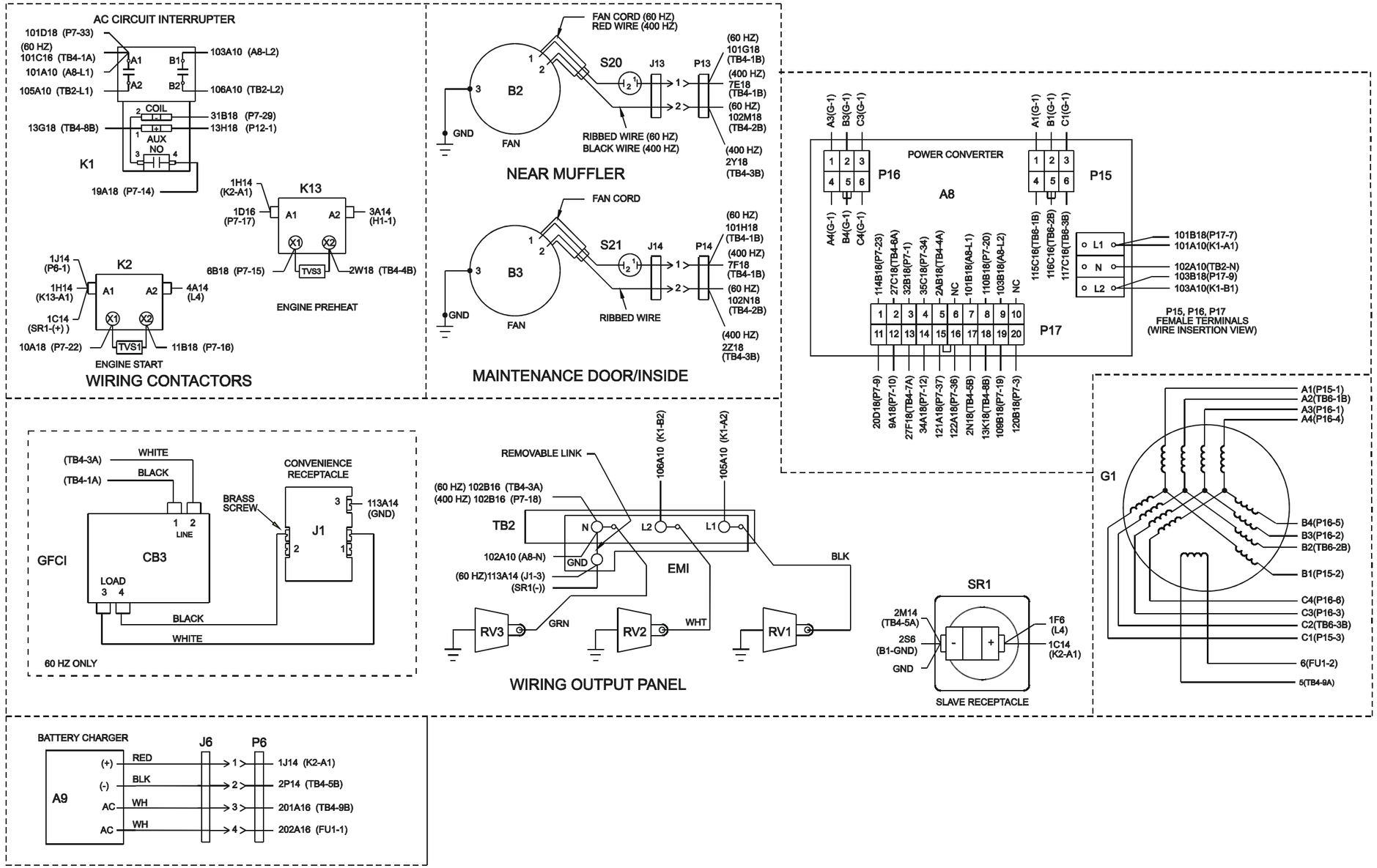

Figure FO-2. Generator Set Wiring Diagram (Sheet 3 of 4)

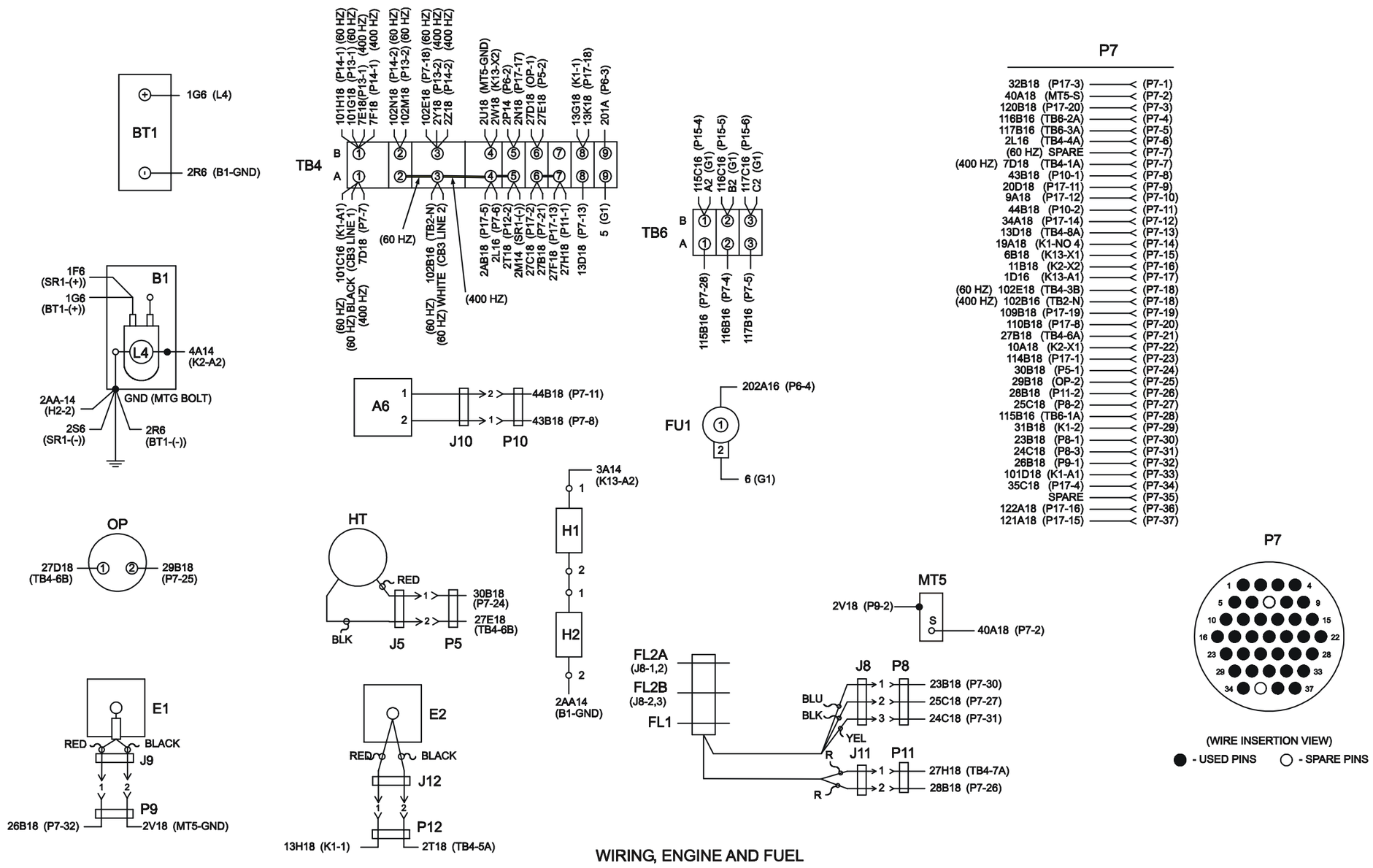

Figure FO-2. Generator Set Wiring Diagram (Sheet 4 of 4)

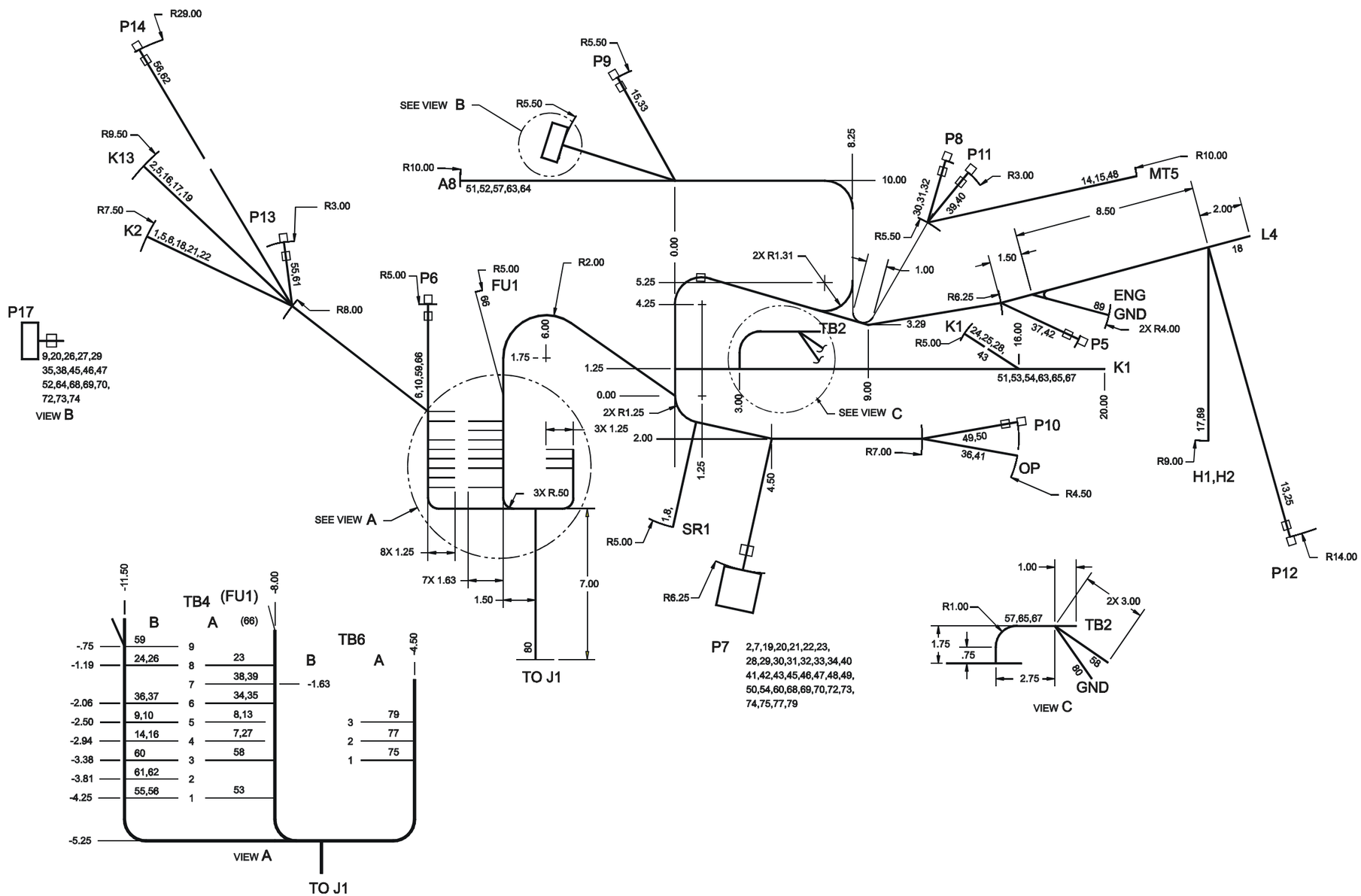

Figure FO-3. Engine Wiring Harness Diagram, 60 Hz (Sheet 1 of 2)

WIRE LIST TABLE

WIRE REF NO	WIRE MARKING	FROM	TERMINAL FN	TO	TERMINAL FN	WIRE FN	MARKING COLOR	WIRE LENGTH
1	1C14	SR1-(+)	22	K2-A1	9	7	RED	50
2	1D16	P7-17	2	K13-A1	9	6	RED	57.5
3								
4								
5	1H14	K2-A1	9	K13-A1	9	7	RED	16
6	1J14	P6-1	15	K2-A1	9	7	RED	20.5
7	2L16	P7-6	2	TB4-4A	26	6	RED	31
8	2M14	SR1-(-)	22	TB4-5A	26	7	RED	34
9	2N18	P17-17	34	TB4-5B	27	5	RED	58
10	2P14	P6-2	15	TB4-5B	26	7	RED	8.5
11								
12								
13	2T18	P12-2	15	TB4-5A	27	5	RED	59
14	2U18	MT5-GND	13	TB4-4B	27	5	RED	54
15	2V18	P9-2	15	MT5-GND	13	5	RED	36
16	2W18	K13-X2	30	TB4-4B	27	5	RED	21.5
17	3A14	H1-1	31	K13-A2	9	7	RED	84
18	4A14	K2-A2	9	L4	21	7	RED	73
19	6B18	P7-15	2	K13-X1	30	5	RED	57.5
20	9A18	P7-10	2	P17-12	34	5	RED	46
21	10A18	P7-22	2	K2-X1	30	5	RED	55.5
22	11B18	P7-16	2	K2-X2	30	5	RED	55.5
23	13D18	P7-13	2	TB4-8A	27	5	RED	29
24	13G18	K1-1	18	TB4-8B	27	5	RED	48
25	13H18	K1-1	18	P12-1	15	5	RED	62
26	13K18	TB4-8B	27	P17-18	34	5	RED	59
27	2AB18	P17-5	34	TB4-4A	27	5	RED	50
28	19A18	P7-14	2	K1-NO4	18	5	RED	35
29	20D18	P7-9	2	P17-11	34	5	RED	46
30	23B18	P7-30	2	P8-1	15	5	RED	35
31	24C18	P7-31	2	P8-3	15	5	RED	35
32	25C18	P7-27	2	P8-2	15	5	RED	35
33	26B18	P7-32	2	P9-1	15	5	RED	46
34	27B18	P7-21	2	TB4-6A	27	5	RED	30
35	27C18	P17-2	34	TB4-6A	27	5	RED	49
36	27D18	OP-1	19	TB4-6B	27	5	RED	43
37	27E18	P5-2	15	TB4-6B	27	5	RED	51
38	27F18	P17-13	34	TB4-7A	27	5	RED	48.5
39	27H18	P11-1	15	TB4-7A	27	5	RED	38.5
40	28B18	P7-26	2	P11-2	15	5	RED	35
41	29B18	P7-25	2	OP-2	19	5	RED	20
42	30B18	P7-24	2	P5-1	15	5	RED	38
43	31B18	P7-29	2	K1-2	18	5	RED	35
44								
45	32B18	P7-1	2	P17-3	34	5	RED	46
46	34A18	P7-12	2	P17-14	34	5	RED	46
47	35C18	P7-34	2	P17-4	34	5	RED	46
48	40A18	P7-2	2	MT5-S	13	5	RED	44
49	43B18	P7-8	2	P10-1	15	5	RED	20
50	44B18	P7-11	2	P10-2	15	5	RED	20
51	101A10	A8-L1	20	K1-A1	8	4	BLK	56
52	101B18	A8-L1	19	P17-7	34	5	BLK	15.5
53	101C16	TB4-1A	26	K1-A1	9	6	BLK	40
54	101D18	P7-33	2	K1-A1	10	5	BLK	33.5
55	101G18	TB4-1B	27	P13-1	15	5	BLK	16.5
56	101H18	TB4-1B	27	P14-1	15	5	BLK	41.5

CONTINUED

WIRE REF NO	WIRE MARKING	FROM	TERMINAL FN	TO	TERMINAL FN	WIRE FN	MARKING COLOR	WIRE LENGTH
57	102A10	TB2-N	8	A8-N	20	4	BLK	43
58	102B16	TB4-3A	26	TB2-N	9	6	BLK	27.5
59	201A16	P6-3	15	TB4-9B	26	6	BLK	7.0
60	102E18	P7-18	2	TB4-3B	27	5	BLK	38
61	102M18	TB4-2B	27	P13-2	15	5	BLK	16
62	102N18	TB4-2B	27	P14-2	15	5	BLK	41
63	103A10	A8-L2	20	K1-B1	8	4	BLK	56
64	103B18	A8-L2	19	P17-9	34	5	BLK	15.5
65	105A10	TB2-L1	8	K1-A2	8	4	BLK	22
66	202A16	P6-4	15	FU1-1	12	6	BLK	21.5
67	106A10	TB2-L2	8	K1-B2	8	4	BLK	22
68	122A18	P7-36	2	P17-16	34	5	BLK	46
69	109B18	P7-19	2	P17-19	34	5	BLK	46
70	110B18	P7-20	2	P17-8	34	5	BLK	46
71								
72	120B18	P7-3	2	P17-20	34	5	BLK	46
73	121A18	P7-37	2	P17-15	34	5	BLK	46
74	114B18	P7-23	2	P17-1	34	5	BLK	46
75	115B16	P7-28	2	TB6-1A	26	6	BLK	38
76								
77	116B16	P7-4	2	TB6-2A	26	6	BLK	38.5
78								
79	117B16	P7-5	2	TB6-3A	26	6	BLK	39
80	113A14	J1-3	32	GND	9	7	BLK	37
81								
82								
83								
84								
85								
86		SR1-(-)	23	GND	8	4		8
87								
88		H1-2	31	H2-1	31	7		2
89	2AA14	H2-2	31	B1-GND	31	7	BLK	21

Figure FO-3. Engine Wiring Harness Diagram, 60 Hz (Sheet 2 of 2)

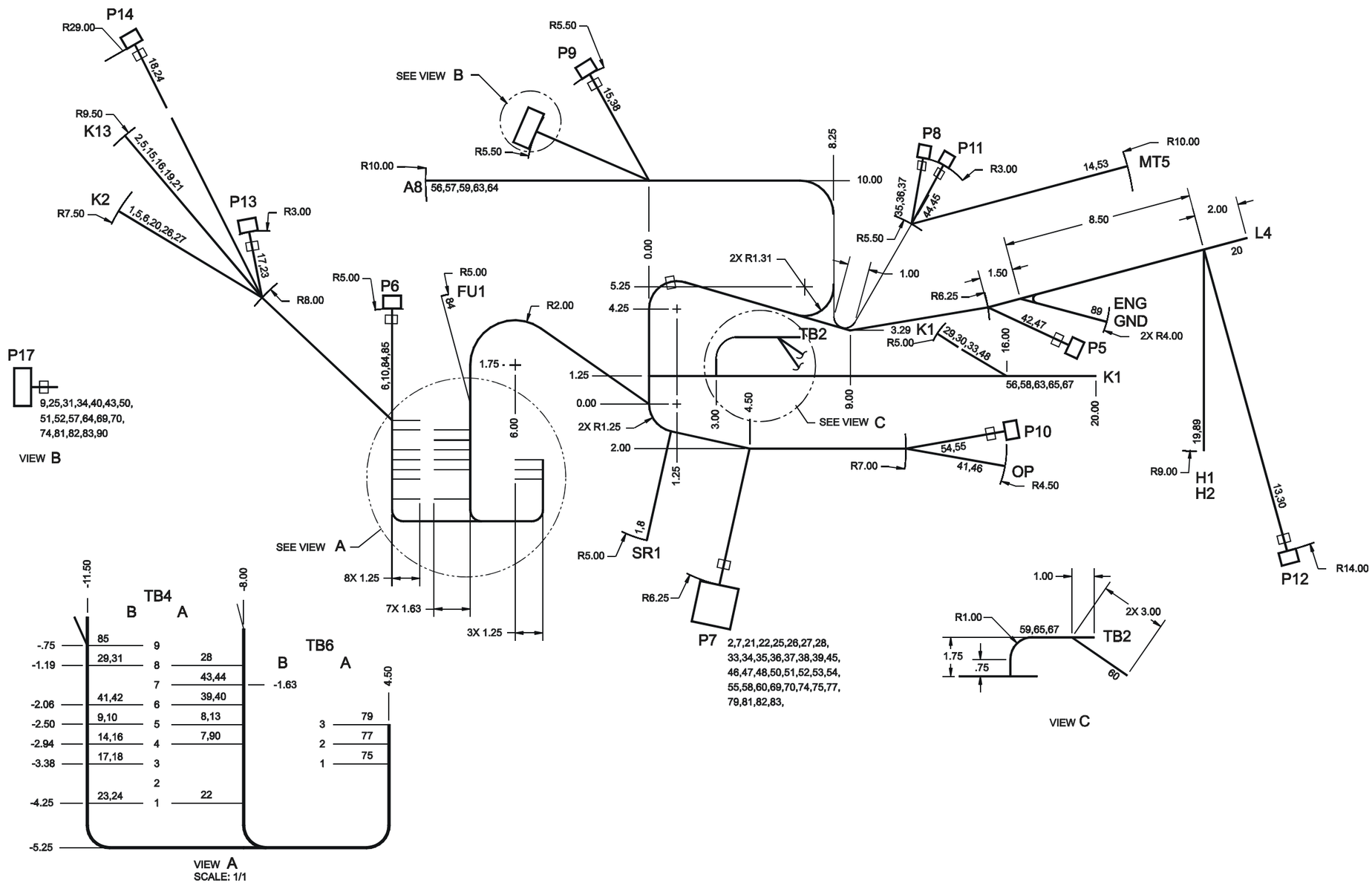

Figure FO-4. Engine Wiring Harness Diagram, 400 Hz (Sheet 1 of 2)

WIRE LIST TABLE

WIRE REF NO	WIRE MARKING	FROM	TERMINAL FN	TO	TERMINAL FN	WIRE FN	MARKING COLOR	WIRE LENGTH
1	1C14	SR1-(+)	22	K2-A1	9	7	RED	50
2	1D16	P7-17	2	K13-A1	9	6	RED	57.5
3								
4								
5	1H14	K2-A1	9	K13-A1	9	7	RED	16
6	1J14	P6-1	15	K2-A1	9	7	RED	20.5
7	2L16	P7-6	2	TB4-4A	26	6	RED	31
8	2M14	SR1-(-)	22	TB4-5A	26	7	RED	34
9	2N18	P17-17	34	TB4-5B	27	5	RED	58
10	2P14	P6-2	15	TB4-5B	26	7	RED	8.5
11								
12								
13	2T18	P12-2	15	TB4-5A	27	5	RED	59
14	2U18	MT5-GND	13	TB4-4B	27	5	RED	54
15	2V18	P9-2	15	MTG-GND	13	5	RED	36
16	2W18	K13-X2	30	TB4-4B	27	5	RED	21.5
17	2Y18	TB4-3B	27	P13-2	15	5	RED	15.5
18	2Z18	TB4-3B	27	P14-2	15	5	RED	40.5
19	3A14	H1-1	31	K13-A2	9	7	RED	84
20	4A14	K2-A2	9	L4	21	7	RED	73
21	6B18	P7-15	2	K13-X1	30	5	RED	57.5
22	7D18	P7-7	2	TB4-1A	27	5	RED	32.5
23	7E18	TB4-1B	27	P13-1	15	5	RED	16.5
24	7F18	TB4-1B	27	P14-1	15	5	RED	41.5
25	9A18	P7-10	2	P17-12	34	5	RED	46
26	10A18	P7-22	2	K2-X1	30	5	RED	55.5
27	11B18	P7-16	2	K2-X2	30	5	RED	55.5
28	13D18	P7-13	2	TB4-8A	27	5	RED	29
29	13G18	K1-1	18	TB4-8B	27	5	RED	48
30	13H18	K1-1	18	P12-1	15	5	RED	62
31	13K18	TB4-8B	27	P17-18	34	5	RED	59
32								
33	19A18	P7-14	2	K1-NO4	18	5	RED	35
34	20D18	P7-9	2	P17-11	34	5	RED	46
35	23B18	P7-30	2	P8-1	15	5	RED	35
36	24C18	P7-31	2	P8-3	15	5	RED	35
37	25C18	P7-27	2	P8-2	15	5	RED	35
38	26B18	P7-32	2	P9-1	15	5	RED	46
39	27B18	P7-21	2	TB4-6A	27	5	RED	30
40	27C18	TB4-6A	27	P17-2	34	5	RED	49
41	27D18	OP-1	19	TB4-6B	27	5	RED	43
42	27E18	TB4-6B	27	P5-2	15	5	RED	51
43	27F18	TB4-7A	27	P17-13	34	5	RED	48.5
44	27H18	TB4-7A	27	P11-1	15	5	RED	38.5
45	28B18	P7-26	2	P11-2	15	5	RED	35
46	29B18	P7-25	2	OP-2	19	5	RED	20
47	30B18	P7-24	2	P5-1	15	5	RED	38
48	31B18	P7-29	2	K1-2	18	5	RED	35
49								
50	32B18	P7-1	2	P17-3	34	5	RED	46
51	34A18	P7-12	2	P17-14	34	5	RED	46
52	35C18	P7-34	2	P17-4	34	5	RED	46
53	40A18	P7-2	2	MT5-S	13	5	RED	44
54	43B18	P7-8	2	P10-1	15	5	RED	20
55	44B18	P7-11	2	P10-2	15	5	RED	20
56	101A10	A8-L1	20	K1-A1	8	4	BLK	56

CONTINUED

WIRE REF NO	WIRE MARKING	FROM	TERMINAL FN	TO	TERMINAL FN	WIRE FN	MARKING COLOR	WIRE LENGTH
57	101B18	A8-L1	19	P17-7	34	5	BLK	15.5
58	101D18	P7-33	2	K1-A1	10	5	BLK	33.5
59	102A10	TB2-N	8	A8-N	20	4	BLK	43
60	102B16	P7-18	2	TB2-N	9	6	BLK	23.5
61								
62								
63	103A10	A8-L2	20	K1-B1	8	4	BLK	56
64	103B18	A8-L2	19	P17-9	34	5	BLK	15.5
65	105A10	TB2-L1	8	K1-A2	8	4	BLK	22
66								
67	106A10	TB2-L2	8	K1-B2	8	4	BLK	22
68								
69	109B18	P7-19	2	P17-19	34	5	BLK	46
70	110B18	P7-20	2	P17-8	34	5	BLK	46
71								
72								
73								
74	114B18	P7-23	2	P17-1	34	5	BLK	46
75	115B16	P7-28	2	TB6-1A	26	6	BLK	38
76								
77	116B16	P7-4	2	TB6-2A	26	6	BLK	38.5
78								
79	117B16	P7-5	2	TB6-3A	26	6	BLK	39
80								
81	120B18	P7-3	2	P17-20	34	5	BLK	46
82	121A18	P7-37	2	P17-15	34	5	BLK	46
83	122A18	P7-36	2	P17-16	34	5	BLK	46
84	202A16	P6-4	15	FU1-1	12	6	BLK	21.5
85	201A16	P6-3	15	TB4-9B	26	6	BLK	7.0
86		SR1-(-)	23	GND	8	4		
87								
88		H1-2	31	H2-1	31	7		
89	2AA14	H2-2	31	B1-GND	31	7	BLK	21
90	2AB18	P17-5	34	TB4-4A	27	5	RED	50

Figure FO-4. Engine Wiring Harness Diagram, 400 Hz (Sheet 2 of 2)

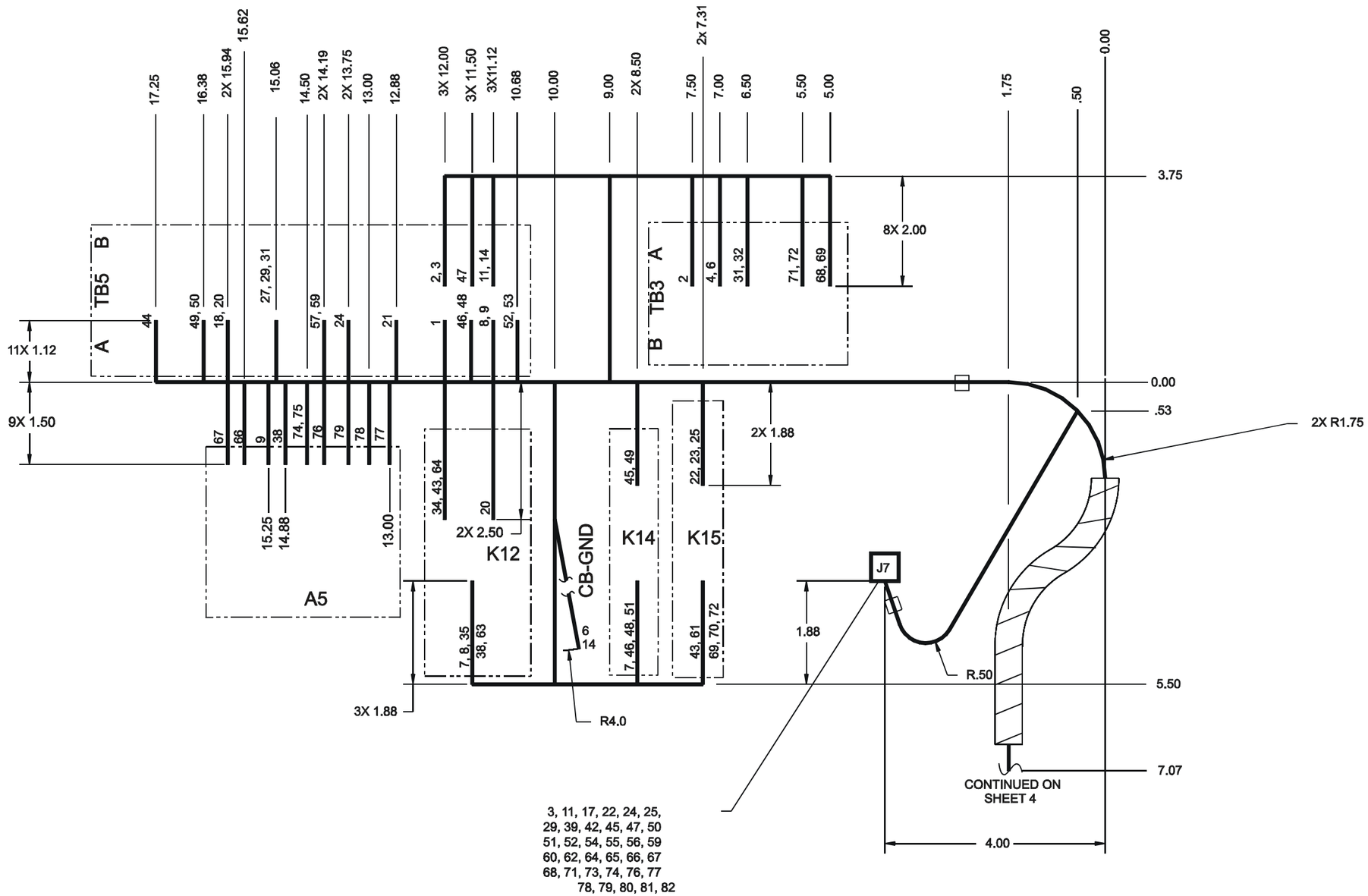

Figure FO-5. Control Box Wiring Harness Diagram, 60 Hz (Sheet 1 of 3)

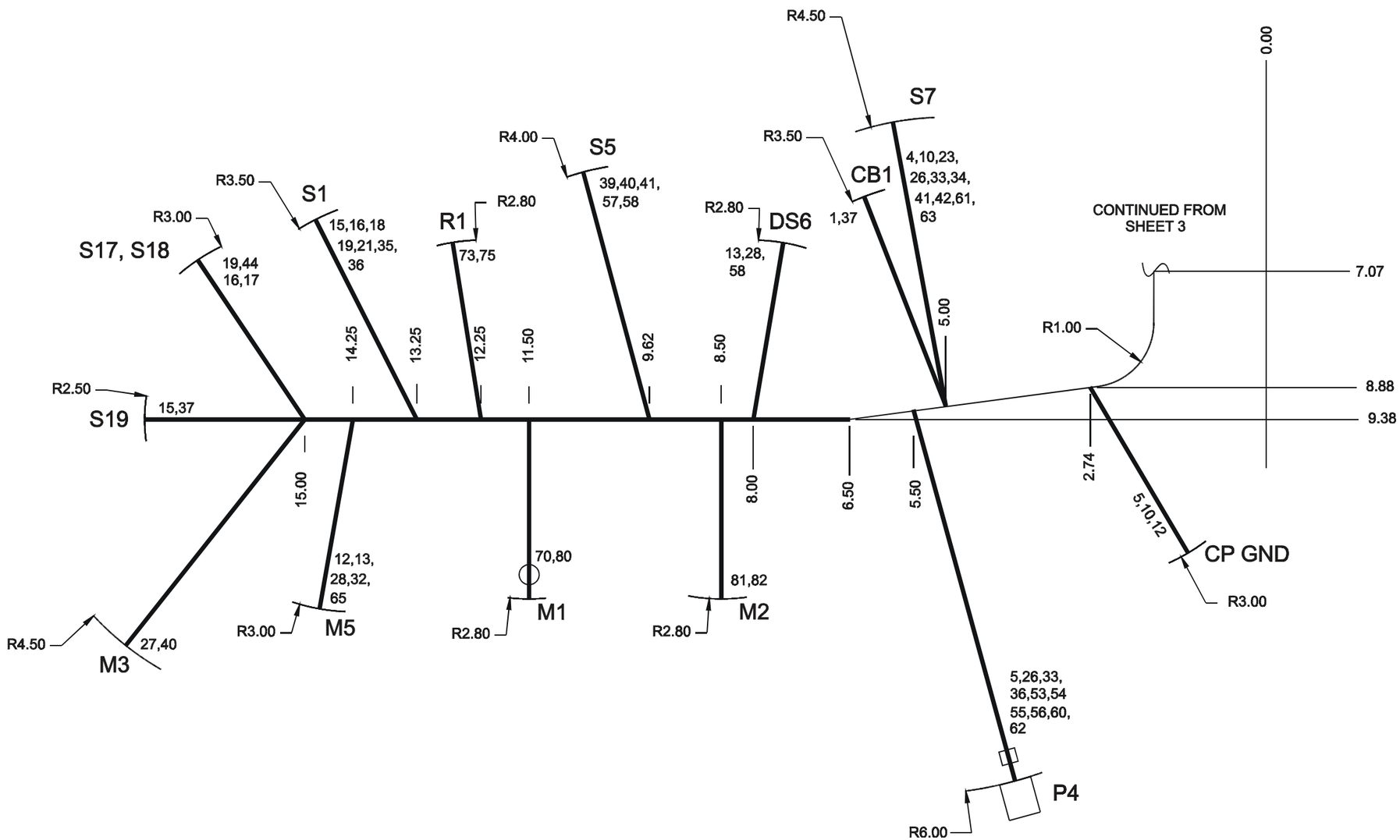

Figure FO-5. Control Box Wiring Harness Diagram, 60 Hz (Sheet 2 of 3)

WIRE LIST TABLE

WIRE REF NO	WIRE MARKING	FROM	TERMINAL FN	TO	TERMINAL FN	WIRE FN	MARKING COLOR	WIRE LENGTH
1	1A16	TB5-13A	7	CB1-LINE	8	3	RED	26.5
2	1B16	TB5-13B	7	TB3-1A	7	3	RED	8.0
3	1E16	J7-17	2	TB5-13B	7	3	RED	23.5
4	2A18	TB3-2A	6	S7-2	6	4	RED	32.0
5	2B20	CP-GND	10	P4-6	13	5	RED	12.8
6	2C18	TB3-2A	6	CB-GND	10	4	RED	14.3
7	2D18	K14-13	6	K12-12	6	4	RED	6.0
8	2E18	K12-12	6	TB5-15A	6	4	RED	10.3
9	2F18	A5-G	6	TB5-15A	6	4	RED	6.5
10	2G20	CP-GND	10	S7-2	6	5	RED	11.0
11	2H16	J7-6	2	TB5-15B	7	3	RED	22.0
12	2J20	M5-G	10	CP-GND	10	5	RED	18.5
13	2K20	M5-G	10	DS6-3	TIN	5	RED	12.0
14	2X18	CB-GND	10	TB5-15B	6	4	RED	13.5
15	5A16	S1-5	7	S19-2	7	3	RED	11.0
16	5B18	S1-5	6	S18-2	6	4	RED	7.3
17	6A18	J7-15	2	S18-1	6	4	RED	32.0
18	7A18	S1-2	6	TB5-4A	6	4	RED	39.5
19	7B18	S1-4	6	S17-3	6	4	RED	8.5
20	7C18	K12-1	6	TB5-4A	6	4	RED	8.0
21	8A18	S1-1	6	TB5-11A	6	4	RED	37.3
22	9B18	J7-10	2	K15-8	6	4	RED	15.5
23	9C18	S7-9	6	K15-8	6	4	RED	24.8
24	10B18	J7-22	2	TB5-9A	6	4	RED	20.5
25	11A18	J7-16	2	K15-1	6	4	RED	15.3
26	12A20	S7-3	6	P4-1	13	5	RED	10.8
27	13A20	TB5-7A	6	M3-1	9	5	RED	41.5
28	13B20	M5-I	10	DS6-1	TIN	5	RED	12.0
29	13C18	TB5-6A	6	J7-13	2	4	RED	22.0
30								
31	13F20	TB5-6A	6	TB3-3A	6	5	RED	14.3
32	13J18	TB3-3A	6	M5-I	10	4	RED	39.5
33	14A20	S7-5	6	P4-5	13	5	RED	10.5
34	35D18	K12-8	6	S7-4	6	4	RED	29.5
35	15A18	K12-14	6	S1-3	6	4	RED	40.0
36	15B18	S1-3	6	P4-7	13	4	RED	16.8
37	16A16	S19-1	7	CB1-LOAD	8	3	RED	14.5
38	17A18	K12-9	6	A5-F	6	4	RED	14.0
39	19B18	J7-14	2	S5-4	6	4	RED	28.0
40	20A20	M3-2	9	S5-5	6	5	RED	13.3
41	20B20	S5-5	6	S7-8	6	5	RED	11.8
42	20C18	S7-8	6	J7-9	2	4	RED	23.8
43	21A20	K15-12	6	K12-4	6	5	RED	13.0
44	22A18	S17-2	6	TB5-1A	6	4	RED	43.0
45	23A18	K14-8	6	J7-30	2	4	RED	16.5
46	24A18	K14-12	6	TB5-14A	6	4	RED	10.0
47	24B18	TB5-14B	6	J7-31	2	4	RED	23.0

WIRE LIST TABLE (CONTINUED)

WIRE REF NO	WIRE MARKING	FROM	TERMINAL FN	TO	TERMINAL FN	WIRE FN	MARKING COLOR	WIRE LENGTH
48	24D18	K14-14	6	TB5-14A	6	4	RED	10.3
49	25A20	TB5-3A	6	K14-5	6	5	RED	10.5
50	25B18	TB5-3A	6	J7-27	2	4	RED	24.3
51	26A18	K14-9	6	J7-32	2	4	RED	24.0
52	27A18	TB5-16A	6	J7-21	2	4	RED	18.5
53	27G18	TB5-16A	6	P4-3	13	4	RED	30.0
54	28A18	J7-26	2	P4-10	13	4	RED	26.3
55	29A18	P4-9	13	J7-25	2	4	RED	26.3
56	30A18	P4-8	13	J7-24	2	4	RED	26.3
57	31A20	TB5-8A	6	S5-2	6	5	RED	35.5
58	31D20	S5-2	6	DS6-2	TIN	5	RED	8.8
59	31E18	J7-29	2	TB5-8A	6	4	RED	21.5
60	32A18	J7-1	2	P4-4	13	4	RED	26.3
61	33A18	S7-1	6	K15-9	6	4	RED	34.5
62	34B18	J7-12	2	P4-2	13	4	RED	26.3
63	35A20	S7-4	6	K12-13	6	5	RED	33.0
64	35B18	K12-8	6	J7-34	2	4	RED	20.0
65	40B18	M5-S	10	J7-2	2	4	RED	31.5
66	43A18	A5-H	6	J7-8	2	4	RED	23.5
67	44A18	A5-J	6	J7-11	2	4	RED	24.0
68	101E18	TB3-7A	6	J7-33	2	4	BLK	24.9
69	101K18	TB3-7A	6	K15-14	6	4	BLK	19.0
70	101L18	K15-14	6	M1-1	11	4	BLK	40.0
71	102F18	J7-18	2	TB3-6A	6	4	BLK	24.5
72	102K18	TB3-6A	6	K15-13	6	4	BLK	19.0
73	109A18	R1-3	TIN	J7-19	2	4	BLK	29.0
74	110A18	A5-E	6	J7-20	2	4	BLK	22.0
75	110C18	A5-E	6	R1-1	TIN	4	BLK	37.0
76	114A16	A5-D	7	J7-23	2	3	BLK	22.0
77	115A16	A5-A	7	J7-28	2	3	BLK	20.5
78	116A16	A5-B	7	J7-4	2	3	BLK	21.0
79	117A16	A5-C	7	J7-5	2	3	BLK	21.5
80	120A18	M1-2	11	J7-3	2	4	BLK	29.0
81	121B18	J7-37	2	M2-(-)	11	4	BLK	25.3
82	122B18	J7-36	2	M2-(+)	11	4	BLK	25.3
83		S1-2	6	S1-4	6	4		4.3
84		S5-1	6	S5-4	6	4		1.3
85								
86		R1-2	TIN	R1-3	TIN	4		4.0

Figure FO-5. Control Box Wiring Harness Diagram, 60 Hz (Sheet 3 of 3)

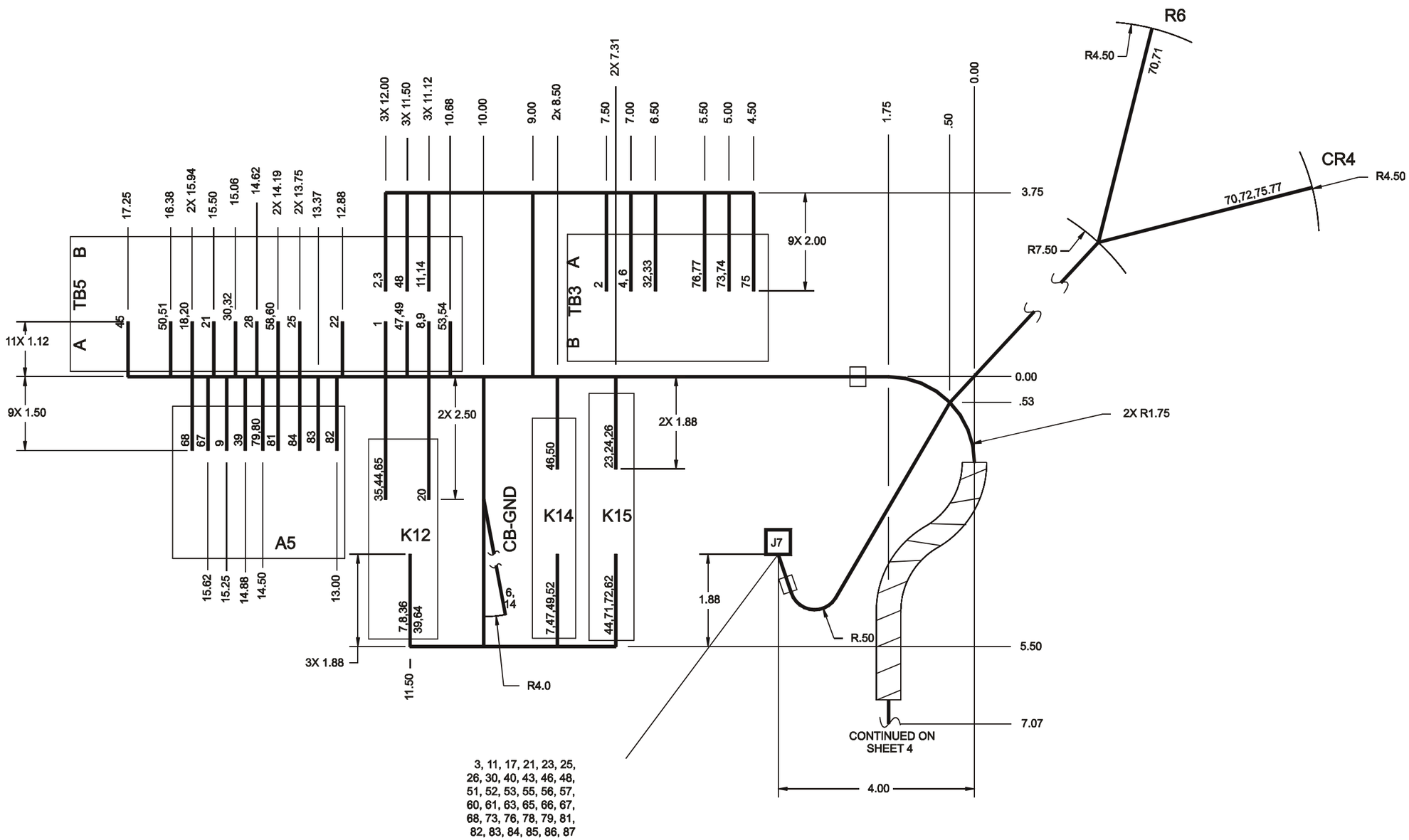

Figure FO-6. Control Box Wiring Harness Diagram, 400 Hz (Sheet 1 of 3)

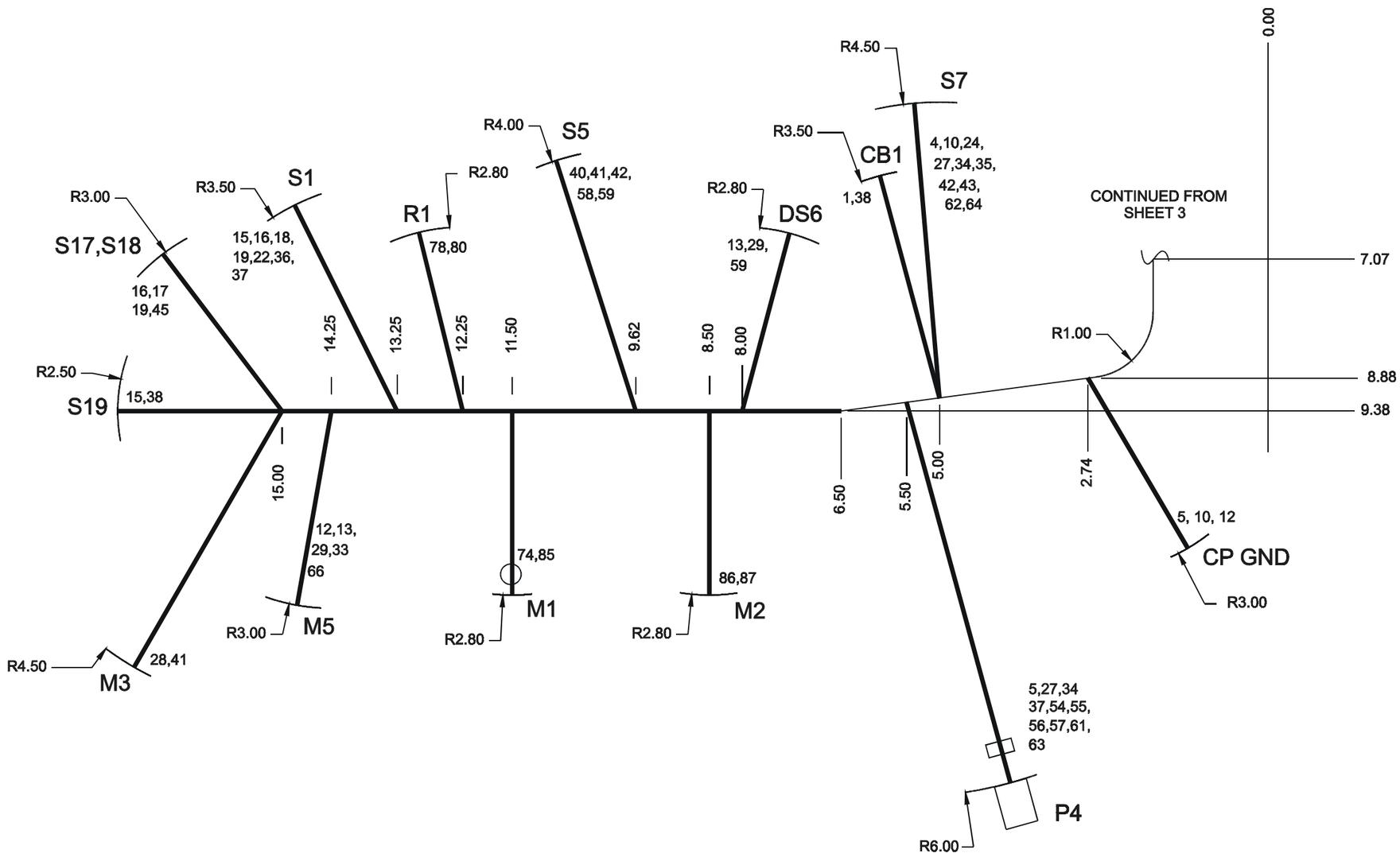

Figure FO-6. Control Box Wiring Harness Diagram, 400 Hz (Sheet 2 of 3)

WIRE LIST TABLE

WIRE REF NO	WIRE MARKING	FROM	TERMINAL FN	TO	TERMINAL FN	WIRE FN	MARKING COLOR	WIRE LENGTH
1	1A16	TB5-13A	7	CB1-LINE	8	3	RED	26.5
2	1B16	TB5-13B	7	TB3-1A	7	3	RED	8.0
3	1E16	J7-17	2	TB5-13B	7	3	RED	23.5
4	2A18	TB3-2A	6	S7-2	6	4	RED	32.0
5	2B20	CP-GND	10	P4-6	13	5	RED	12.8
6	2C18	TB3-2A	6	CB-GND	10	4	RED	14.3
7	2D18	K14-13	6	K12-12	6	4	RED	6.0
8	2E18	K12-12	6	TB5-15A	6	4	RED	10.3
9	2F18	A5-G	6	TB5-15A	6	4	RED	6.5
10	2G20	CP-GND	10	S7-2	6	5	RED	11.0
11	2H16	J7-6	2	TB5-15B	7	3	RED	22.0
12	2J20	M5-G	10	CP-GND	10	5	RED	18.5
13	2K20	M5-G	10	DS6-3	TIN	5	RED	12.0
14	2X18	CB-GND	10	TB5-15B	6	4	RED	13.5
15	5A16	S1-5	7	S19-2	7	3	RED	11.0
16	5B18	S1-5	6	S18-2	6	4	RED	7.3
17	6A18	J7-15	2	S18-1	6	4	RED	32.0
18	7A18	S1-2	6	TB5-4A	6	4	RED	39.5
19	7B18	S1-4	6	S17-3	6	4	RED	8.5
20	7C18	TB5-4A	6	K12-1	6	4	RED	8.0
21	7D18	TB5-5A	6	J7-7	2	4	RED	22.0
22	8A18	S1-1	6	TB5-11A	6	4	RED	37.3
23	9B18	J7-10	2	K15-8	6	4	RED	15.5
24	9C18	S7-9	6	K15-8	6	4	RED	24.8
25	10B18	J7-22	2	TB5-9A	6	4	RED	20.5
26	11A18	J7-16	2	K15-1	6	4	RED	15.3
27	12A20	S7-3	6	P4-1	13	5	RED	10.8
28	13A20	TB5-7A	6	M3-1	9	5	RED	41.5
29	13B20	M5-I	10	DS6-1	TIN	5	RED	12.0
30	13C18	TB5-6A	6	J7-13	2	4	RED	22.0
31								
32	13F20	TB5-6A	6	TB3-3A	6	5	RED	14.3
33	13J18	TB3-3A	6	M5-I	10	4	RED	39.5
34	14A20	S7-5	6	P4-5	13	5	RED	10.5
35	35D18	K12-8	6	S7-4	6	4	RED	29.5
36	15A18	K12-14	6	S1-3	6	4	RED	40.0
37	15B18	S1-3	6	P4-7	13	4	RED	16.8
38	16A16	S19-1	7	CB1-LOAD	8	3	RED	14.5
39	17A18	K12-9	6	A5-F	6	4	RED	14.0
40	19B18	J7-14	2	S5-4	6	4	RED	28.0
41	20A20	M3-2	9	S5-5	6	5	RED	13.3
42	20B20	S5-5	6	S7-8	6	5	RED	11.8
43	20C18	S7-8	6	J7-9	2	4	RED	23.8
44	21A20	K15-12	6	K12-4	6	5	RED	13.0
45	22A18	S17-2	6	TB5-1A	6	4	RED	43.0
46	23A18	K14-8	6	J7-30	2	4	RED	16.5
47	24A18	K14-12	6	TB5-14A	6	4	RED	10.4
48	24B18	TB5-14B	6	J7-31	2	4	RED	23.0
49	24D18	K14-14	6	TB5-14A	6	4	RED	10.3

WIRE LIST TABLE (CONTINUED)

WIRE REF NO	WIRE MARKING	FROM	TERMINAL FN	TO	TERMINAL FN	WIRE FN	MARKING COLOR	WIRE LENGTH
50	25A20	TB5-3A	6	K14-5	6	5	RED	10.5
51	25B18	TB5-3A	6	J7-27	2	4	RED	24.3
52	26A18	K14-9	6	J7-32	2	4	RED	24.0
53	27A18	TB5-16A	6	J7-21	2	4	RED	18.5
54	27G18	TB5-16A	6	P4-3	13	4	RED	30.0
55	28A18	J7-26	2	P4-10	13	4	RED	26.3
56	29A18	P4-9	13	J7-25	2	4	RED	26.3
57	30A18	P4-8	13	J7-24	2	4	RED	26.3
58	31A20	TB5-8A	6	S5-2	6	5	RED	35.5
59	31D20	S5-2	6	DS6-2	TIN	5	RED	8.8
60	31E18	J7-29	2	TB5-8A	6	4	RED	21.5
61	32A18	J7-1	2	P4-4	13	4	RED	26.3
62	33A18	S7-1	6	K15-9	6	4	RED	34.5
63	34B18	J7-12	2	P4-2	13	4	RED	26.3
64	35A20	S7-4	6	K12-13	6	5	RED	33.0
65	35B18	K12-8	6	J7-34	2	4	RED	20.0
66	40B18	M5-S	10	J7-2	2	4	RED	31.5
67	43A18	A5-H	6	J7-8	2	4	RED	23.5
68	44A18	A5-J	6	J7-11	2	4	RED	24.0
69								
70	48A18	CR4-(+)	9	R6-1	TIN	4	RED	9.0
71	49A18	R6-2	TIN	K15-14	6	4	RED	32.1
72	50A18	CR4-(-)	9	K15-13	6	4	RED	32.1
73	101E18	TB3-7A	6	J7-33	2	4	BLK	24.9
74	101K18	TB3-7A	6	M1-1	11	4	BLK	38.7
75	101L18	TB3-8A	6	CR4-AC1	9	4	BLK	31.2
76	102F18	J7-18	2	TB3-6A	6	4	BLK	24.5
77	102K18	TB3-6A	6	CR4-AC2	9	4	BLK	30.2
78	109A18	R1-3	TIN	J7-19	2	4	BLK	29.0
79	110A18	A5-E	6	J7-20	2	4	BLK	22.0
80	110C18	A5-E	6	R1-1	TIN	4	BLK	37.0
81	114A16	A5-D	7	J7-23	2	3	BLK	22.0
82	115A16	A5-A	7	J7-28	2	3	BLK	20.5
83	116A16	A5-B	7	J7-4	2	3	BLK	21.0
84	117A16	A5-C	7	J7-5	2	3	BLK	21.5
85	120A18	M1-2	11	J7-3	2	4	BLK	29.0
86	121B18	J7-37	2	M2-(-)	11	4	BLK	25.3
87	122B18	J7-36	2	M2-(+)	11	4	BLK	25.3
88		S1-2	6	S1-4	6	4		4.3
89		S5-1	6	S5-4	6	4		1.3
90								
91		R1-2	TIN	R1-3	TIN	4		4.0

Figure FO-6. Control Box Wiring Harness Diagram, 400 Hz (Sheet 3 of 3)